202-01E ESP.BM8E-9E-1E

ESPLOSO BRASIERA ELETTRICA RIBALTABILE

EXPLODED DRAWING ELECTRIC TILTING BRAISING PAN

EXPLOSION-ZEICHNUNG ELEKTRO KIPPBRATPFANNE

VUE ÉCLATÉE SAUTEUSE BASCULANTE ELECTRIQUE

(Sr. 900)

Mod.

BM8E080 / BM9E090 / BM1E120 / BM1E150 / BM1E160I / BM1E200I

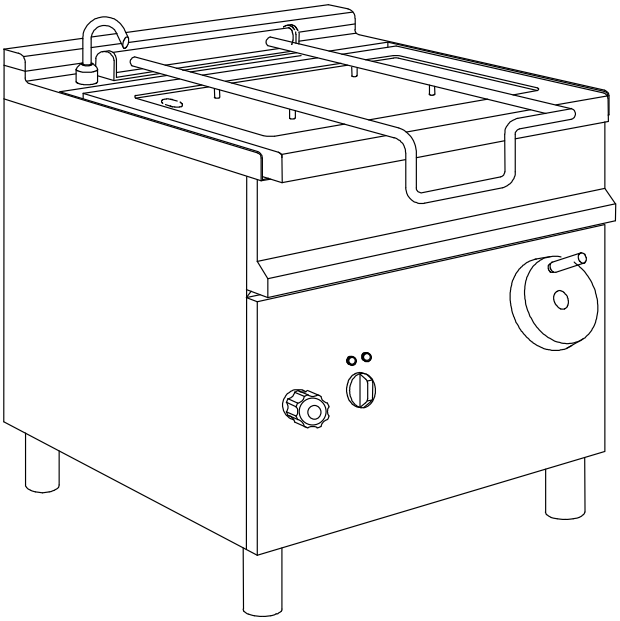

Storia delle revisioni

Punti modificati e natura delle correzioni

Nr. Revis.	Data di revis.	Punto	Natura della correzione	Type of correction	Verbesserungsart	Type de correction
03	29/09/2005	...	Aggiunto BM1E150 / BM1E160I / BM1E200I	Added BM1E150 / BM1E160I / BM1E200I	Zuschlag BM1E150 / BM1E160I / BM1E200I	Ajout BM1E150 / BM1E160I / BM1E200I
04	06/09/2007		Mod. Vite sollevamento			
05	29/02/2008		Aggiornato esploso	Up to date exploded drawings	Zeitnahe Explosion-Zeichnung	Vue éclatée a journée
06	30/05/2013		Aggiornato esploso	Up to date exploded drawings	Zeitnahe Explosion-Zeichnung	Vue éclatée a journée

COD.ESPL. : **202-01 ESP.BM8E-9E-1E**

Validita' esploso
Exploded view validity
Gültigkeit der explosionszeichnung
Validitè de la vue èclatèe

MOD.	Da nr.matr. From serial number Ab Gerätenummer Du nr. d'immatr.	A nr.matr. To serial number Bis Gerätenummer Au nr. d'immatri.
BM8E080	026466OG16/2010	
BM8E080I	027535ON10/2010	
BM8E080C	026527OG21/2010	
BM9E090	025580OC17/2010	
BM9E090I	025692OD01/2010	
BM9E090C	026178OF15/2010	
BAS0021	022729NA28/2009	
BM1E120	026133OF08/2010	
BM1E120I	025815OD21/2010	
BM1E120C	025750OD12/2010	

BM1E150	**025527OC09/2010**	
BM1E150I	**025430OB19/2010**	
BM1E150C	**025430OB19/2010**	
BAS0031	**023784NF30/2009**	
BM1E160I	**027331OM15/2010**	
BM1E200I	**025921OE04/2010**	
BAS0041	**024042NG27/2009**	

ESPLOSO BRASIERA ELETTRICA RIBALTABILE
BM8E080 /BM9E090

EXPLODED DRAWING ELECTRIC TILTING BRAISING PAN
BM8E080 /BM9E090

EXPLOSION-ZEICHNUNG ELEKTRO KIPPBRATPFANNE
BM8E080 /BM9E090

VUE ÉCLATÉE SAUTEUSE BASCULANTE ELECTRIQUE
BM8E080 /BM9E090

Mod. BM8E080 / BM9E090

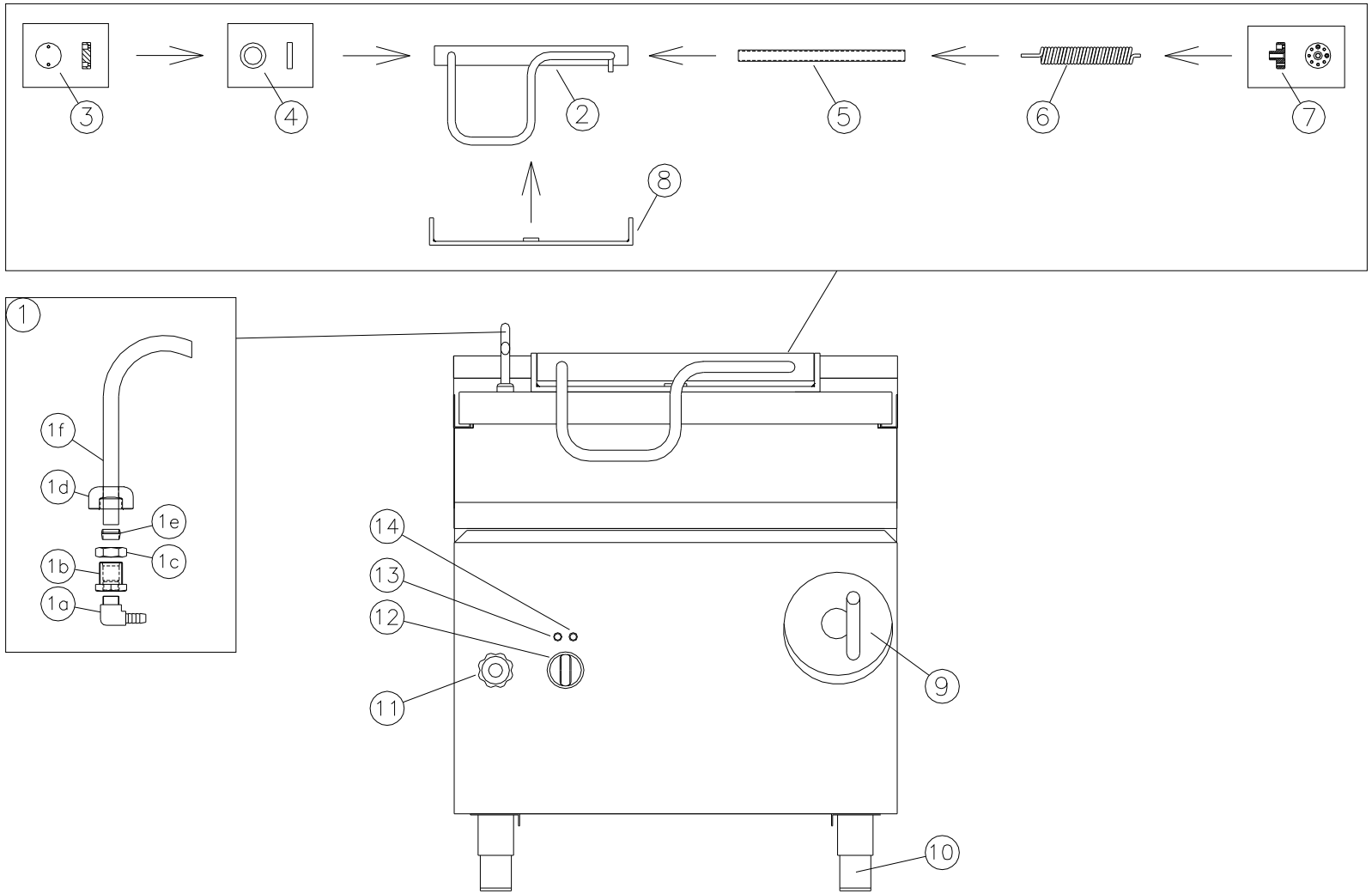

Pos.	Mod.		Cod.	DESCRIZIONE I	DESCRIPTION GB	BESCHREIBUNG D	DESCRIPTION F
1	BM8/9...		GRP04-0110	*ASS. CANNA CARICO H2O VERTICALE*	*Water inlet pipe*	*Wasserzulaufrohr*	*Tube d'eau*
1a	BM8/9...		10400154	PORTAGOMMA M 3/8"X10 A GOMITO CROM.			
1b	BM8/9...		SMB0075-00	MANICOTTO CARICO H2O			
1c	BM8/9...		SMB0078-00	DADO OTTONE M24X1,5			
1d	BM8/9...		SMB0076-00	GHIERA FILET.X CANNA CARICO H2O			
1e	BM8/9...		10400083	BICONO USCITA D.16			
1f	BM8/9...		SMB0574-00	CANNA D.16 VERT.H2O			
02	BM8/9...		SMB0608-00	Maniglia	Handle	Griff	Poignée
03	BM8/9...		SMB0612-00	TESTA SX CERNIERA CROMATA	HINGE HEAD LF CHROM.PLATED	DECKEL LIINKS SCHARNIER	TÊTE GAUC. CHARNERE CHROMEE
04	BM8/9...		SMB0618-00	ANELLO DI RASAMENTO X CERNIERA	SHAVE RING FOR BRAISING PAN HINGE	SCHER RING FUER SCHARNIER	ANNEAU POUR CHARNIERE SAUTEUSE
05	BM8/9...		SMB0614-00	TUBO PERNO X MOLLA CERNIERA	PIN PIPE SPRING HINGE	HOHLSTIFT FUER FEDER SCHARNIER	TUBE PIVOT X RESSORT CHARNIERE
06	BM8/9...		SMB0616-00	Molla x cerniera	Hinge Spring	Scharnierenfeder	Ressort pour charnière
07	BM8/9...		SMB0610-00	TESTA DX CERNIERA CROMATA	HINGE HEAD RGHT CHROM.PLATED	DECKEL RE. SCHARNIER	TÊTE DROITE CHARNERE CHROMEE
08	BM8/9...		SMB0606-00	Supporto cerniera	Hinge support	Scharnierhalter	Support charnière
09	BM8/9...		SMB0636-00	Volantino completo	Handwheel	Handrad	Volant
10	BM8/9...		20100020	Ass. piedino da 2" H=165	Foot 2" H=165	Fuss 2" H=165	Pied 2" H=165
11	BM8/9...		30200008	Rubinetto carico acqua	Water inlet tap	Wasserzulaufhahn	Robinet d'alimentation
12	BM8/9E...			Manopola 45°- 295°	Knob 45°- 295°	Knebel 45°- 295°	Manette 45°- 295°
13	BM8/9E...		40200186	Lampada 230 V arancione	Orange signal lamp	Kontrolleuchte orangenfarbig	Voyant orange
14	BM8/9E...		40200188	Lampada 230 V verde	Green signal lamp	Kontrolleuchte grünenfarbig	Voyant vert

Mod. BM8E080 / BM9E090

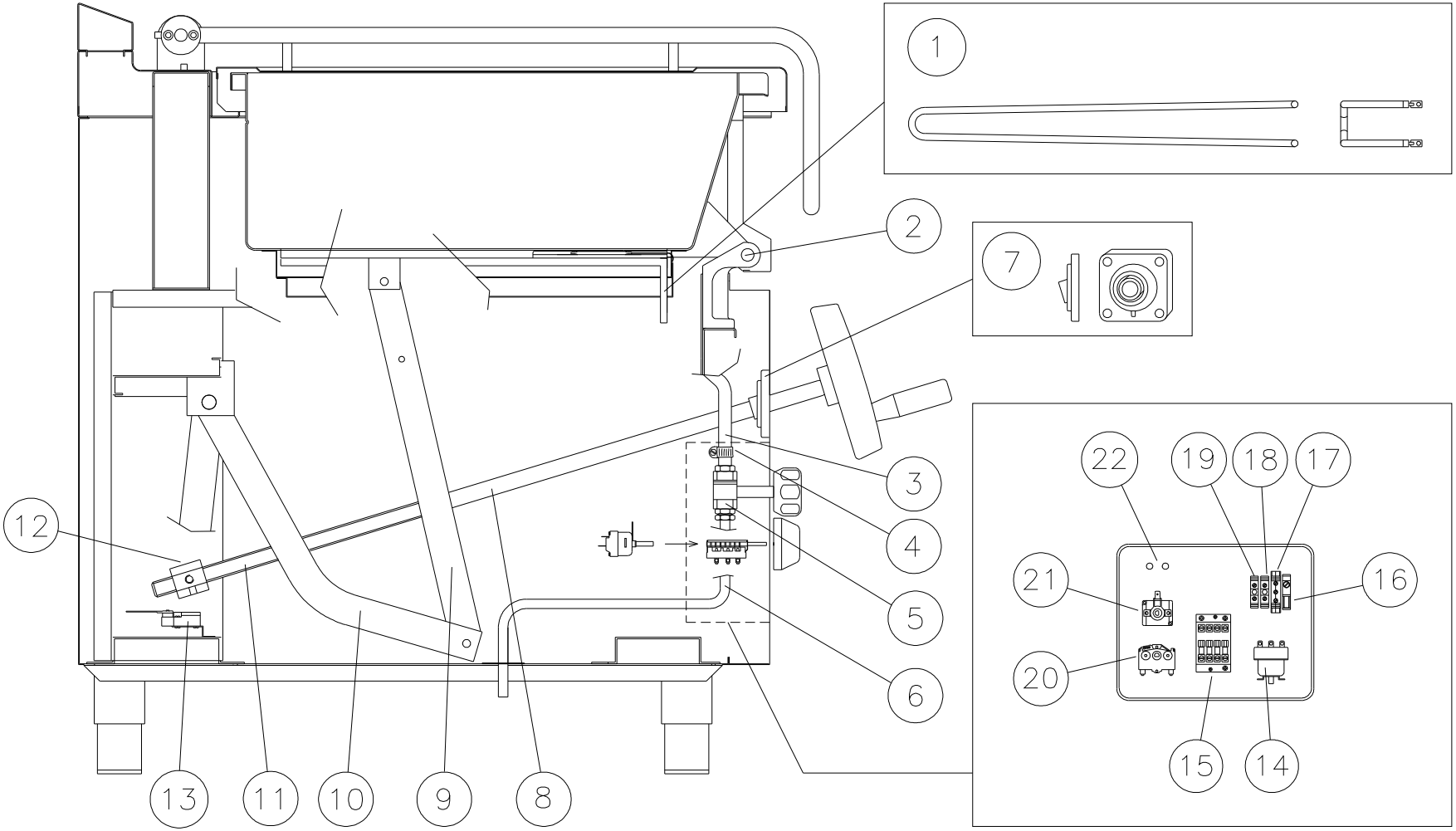

Pos.	Mod.		Cod.	DESCRIZIONE I	DESCRIPTION GB	BESCHREIBUNG D	DESCRIPTION F
01	BM8/9E...	C	40400084	Resistenza 1650 W – 230 V	Heating element 1650 W – 230 V	Heizung 1650 W – 230 V	Résistance 1650 W – 230 V
02	BM8/9….		SMB0634-00	Ass. staffa ribaltamento	Flask tilting of pan	Bügel für hubwerk kippbratpfanne	Étrier soulèvement cuve
03	BM8/9….		10600022	Tubo (silicone) carico H^2O	water inlet pipe	Wasserzulaufrohr	Tube entré d'eau
04	BM8/9….		10300033	Fascetta	Clip	Schlauchbinder	Ceinture serre-tube
05	BM8/9….		30200008	Rubinetto carico acqua	Water inlet tap	Wasserzulaufhahn	Robinet d'alimentation
06	BM8/9....		SMB0066-00	Conduttura carico H^2O	Water inlet pipe	Wasserzulaufrohr	Raccord entré eau
07	BM8/9….		20400012	Supporto ghisa con cuscinetto	Bearing	Kugellager	Coussinet
08	BM8/9….		SMB0630-00	Prolunga per vite	Extension for Screw	Verlängerung für Schraube	Prolonge pour vis
09	BM8/9….		SMB0624-00	Leva sup. sollevamento vasca	Lever for Tilting of pan	Hubhebel kippbratpfanne	Levier soulèvement cuve
10	BM8/9….		SMB0620-00	Ass. gruppo sollevam. vasca	Tilting of pan	Hubwerk kippbratpfanne	Groupe soulèvement cuve
11	BM8/9….		SMB0129-00	Vite x gruppo sollevamento vasca	Screw for tilting of pan	Schraubenmutter	Vis soulèvement cuve
12	BM8/9....	C	SC0022-00	Madrevite	Female screw	Schraubenmutter	Vis mère
13	BM8/9E...	C	40100001	Finecorsa Pizzato FR550	Limit switch	End shalter	Fin de course
14	BM8/9E...	C	40100062	Termostato di sicurezza	Safety thermostat	Sichereitsthermostat	Thermostat de sécurité
15	BM8/9E...	C	40100023	Teleruttore 4P A9/25A	Electromagnetic switch	Fernschalter	Télérupteur
16	BM8/9E...		40200084	Fusibile 5x20 3,15A	Fuse 5x20 3,15A	Schmelzsicherung 5x20 3,15A	Fusible 5x20 3,15A
17	BM8/9E...		40200010	Morsetto tripolare	Threepole Holdfast	Dreipolig- Klammer	Tripolaire serre-câble
18	BM8/9E...		40200020	Morsetto unipolare	Unipolar Holdfast	Einpolig- Klammer	Unipolaire serre-câble
19	BM8/9E...		40200030	Morsetto unipolare	Unipolar Holdfast	Einpolig- Klammer	Unipolaire serre-câble
20	BM8/9E...		40100027	Commutatore	Changeover switch	Wahlschalter	Commutateur
21	BM8/9E...		40100042	Termostato di lavoro	Thermostat	Thermostat	Thermostat
22	BM8/9E...			Neon per lampada	Neon lamp	Neon	Néon pour lampe

Mod. (BM8E080 / BM9E090) + BAS00...

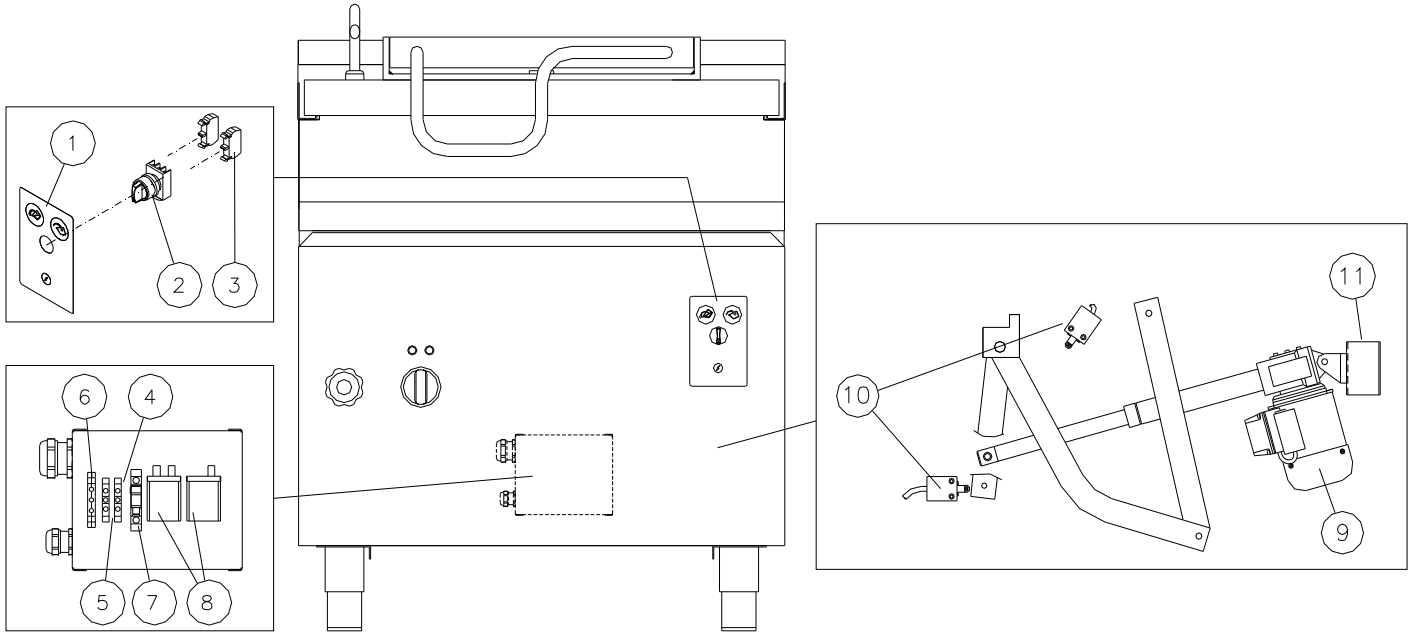

Pos.	Mod.		Cod.	DESCRIZIONE I	DESCRIPTION GB	BESCHREIBUNG D	DESCRIPTION F
01	**BM8/9….**		**40700294**	Mascherina sollev. motoriz.			
02	**BM8/9….**		**40100026**	Selettore 3 posizioni c/rit al centro	Selector 3 positions with return	Wahler 3 position mit zuruck	Sélecteur 3 positions avec retour
03	**BM8/9….**		**40100112**	Blocchetto contatti 1NA	Contact block (normal open contact)	Kontaktblock	Bloc contacts
04	**BM8/9….**		**40200024**	Morsetto unipolare	Unipolar Holdfast	Einpolig- Klammer	Unipolaire serre-câble
05	**BM8/9....**		**40200022**	Morsetto unipolare	Unipolar Holdfast	Einpolig- Klammer	Unipolaire serre-câble
06	**BM8/9….**		**40200032**	Morsetto unipolare	Unipolar Holdfast	Einpolig- Klammer	Unipolaire serre-câble
07	**BM8/9….**		**40200084**	Fusibile	Fuse	Schmelzsicherung	Fusible
08	**BM8/9….**	**C**	**40100030**	Relè 3 P	Relais 3 P	Dreipoligens Relais	Relais 3 P
09	**BM8/9….**		**40300122**	Attuatore lineare corsa	Actuator linear stroke	Aktuator linear fahrtrichtung	Actionneur ligne course
10	**BM8/9….**	**C**	**40100028**	Finecorsa a rotella	Limit switch	Endschalter	Fin de course a roulette
11	**BM1....**		**SMB1048-00**	Staffa fiss. attuatore			

ESPLOSO BRASIERA ELETTRICA RIBALTABILE
BM1E120 / BM1E150

EXPLODED DRAWING ELECTRIC TILTING BRAISING PAN
BM1E120 / BM1E150

EXPLOSION-ZEICHNUNG ELEKTRO KIPPBRATPFANNE
BM1E120 / BM1E150

VUE ÉCLATÉE SAUTEUSE BASCULANTE ELECTRIQUE
BM1E120 / BM1E150

Mod. BM1E120 / BM1E150

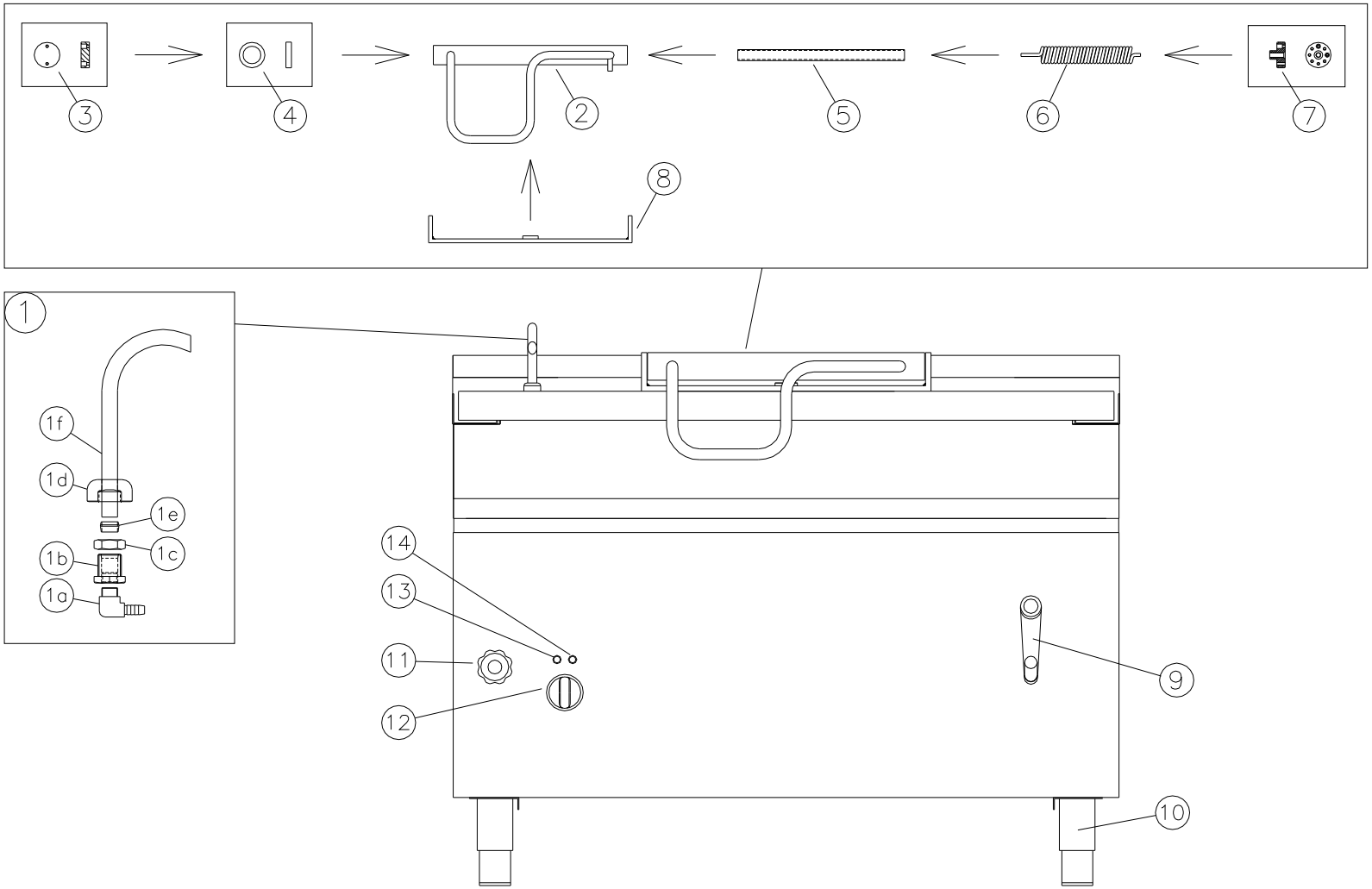

Pos.	Mod.		Cod.	DESCRIZIONE I	DESCRIPTION GB	BESCHREIBUNG D	DESCRIPTION F
1	BM1...		GRP04-0110	*ASS. CANNA CARICO H2O VERTICALE*	*Water inlet pipe*	*Wasserzulaufrohr*	*Tube d'eau*
1a	BM1...		10400154	PORTAGOMMA M 3/8"X10 A GOMITO CROM.			
1b	BM1...		SMB0075-00	MANICOTTO CARICO H2O			
1c	BM1...		SMB0078-00	DADO OTTONE M24X1,5			
1d	BM1...		SMB0076-00	GHIERA FILET.X CANNA CARICO H2O			
1e	BM1...		10400083	BICONO USCITA D.16			
1f	BM1...		SMB0574-00	CANNA D.16 VERT.H2O			
02	BM1...		SMB0608-00	Maniglia	Handle	Griff	Poignée
03	BM1...		SMB0612-00	TESTA SX CERNIERA CROMATA	HINGE HEAD LF CHROM.PLATED	DECKEL LIINKS SCHARNIER	TÊTE GAUC. CHARNERE CHROMEE
04	BM1...		SMB0618-00	ANELLO DI RASAMENTO X CERNIERA	SHAVE RING FOR BRAISING PAN HINGE	SCHER RING FUER SCHARNIER	ANNEAU POUR CHARNIERE SAUTEUSE
05	BM1...		SMB0614-00	TUBO PERNO X MOLLA CERNIERA	PIN PIPE SPRING HINGE	HOHLSTIFT FUER FEDER SCHARNIER	TUBE PIVOT X RESSORT CHARNIERE
06	BM1...		SMB0617-00	Molla x cerniera	Hinge Spring	Scharnierenfeder	Ressort pour charnière
07	BM1...		SMB0610-00	TESTA DX CERNIERA CROMATA	HINGE HEAD RGHT CHROM.PLATED	DECKEL RE. SCHARNIER	TÊTE DROITE CHARNERE CHROMEE
08	BM1...		SMB0606-00	Supporto cerniera	Hinge support	Scharnierhalter	Support charnière
09	BM1...		SB0120-00	Volantino completo	Handwheel	Handrad	Volant
10	BM1...		20100020	Ass. piedino da 2" H=165	Foot 2" H=165	Fuss 2" H=165	Pied 2" H=165
11	BM1...		30200008	Rubinetto carico acqua	Water inlet tap	Wasserzulaufhahn	Robinet d'alimentation
12	BM1E...			Manopola 45°- 295°	Knob 45°- 295°	Knebel 45°- 295°	Manette 45°- 295°
13	BM1E...		40200186	Lampada 230 V arancione	Orange signal lamp	Kontrolleuchte orangenfarbig	Voyant orange
14	BM1E...		40200188	Lampada 230 V verde	Green signal lamp	Kontrolleuchte grünenfarbig	Voyant vert

Mod. BM1E120 / BM1E150

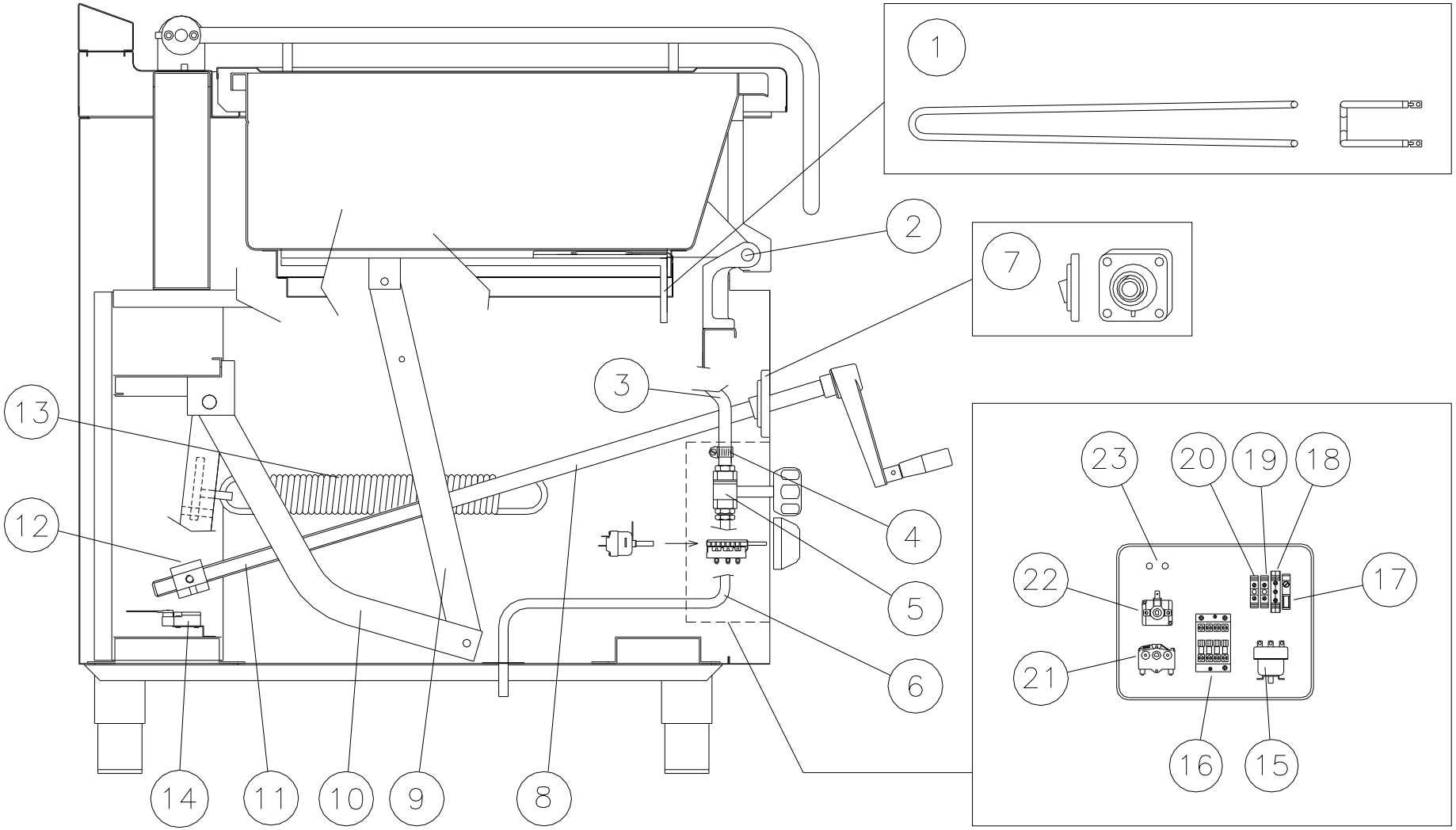

Pos.	Mod.		Cod.	DESCRIZIONE I	DESCRIPTION GB	BESCHREIBUNG D	DESCRIPTION F
01	BM1E...	C	40400084	Resistenza 1650 W – 230 V	Heating element 1650 W – 230 V	Heizung 1650 W – 230 V	Résistance 1650 W – 230 V
02	BM1....		SMB0634-00	Ass. staffa ribaltamento	Flask tilting of pan	Bügel für hubwerk kippbratpfanne	Étrier soulèvement cuve
03	BM1....		10600022	Tubo (silicone) carico H^2O	water inlet pipe	Wasserzulaufrohr	Tube entré d'eau
04	BM1....		10300033	Fascetta	Clip	Schlauchbinder	Ceinture serre-tube
05	BM1....		30200008	Rubinetto carico acqua	Water inlet tap	Wasserzulaufhahn	Robinet d'alimentation
06	BM1....		SMB0066-00	Conduttura carico H^2O	Water inlet pipe	Wasserzulaufrohr	Raccord entré eau
07	BM1....		20400012	Supporto ghisa con cuscinetto	Bearing	Kugellager	Coussinet
08	BM1....		SMB1042-00	Prolunga per vite	Extension for Screw	Verlängerung für Schraube	Prolonge pour vis
09	BM1....		SMB0624-00	Leva sup. sollevamento vasca	Lever for Tilting of pan	Hubhebel kippbratpfanne	Levier soulèvement cuve
10	BM1....		SMB1040-00	Ass. gruppo sollevam. vasca	Tilting of pan	Hubwerk kippbratpfanne	Groupe soulèvement cuve
11	BM1....		SMB0129-00	Vite x gruppo sollevamento vasca	Screw for tilting of pan	Schraubenmutter	Vis soulèvement cuve
12	BM1....	C	SC0022-00	Madrevite	Female screw	Schraubenmutter	Vis mère
13	BM1....		20500030	Molla sollevamento vasca	Spring for tilting of pan	Kompensationsfeder Tiegel	Ressort soulèvement cuve
14	BM1E...	C	40100001	Finecorsa Pizzato FR550	Limit switch	End shalter	Fin de course
15	BM1E...	C	40100062	Termostato di sicurezza	Safety thermostat	Sichereitsthermostat	Thermostat de sécurité
16	BM1E...	C	40100051	Teleruttore 3P+AUX NO 35A AC1-230/50H	Electromagnetic switch	Fernschalter	Télérupteur
17	BM1E...		40200084	Fusibile 5x20 3,15A	Fuse 5x20 3,15A	Schmelzsicherung 5x20 3,15A	Fusible 5x20 3,15A
18	BM1E...		40200010	Morsetto tripolare	Threepole Holdfast	Dreipolig- Klammer	Tripolaire serre-câble
19	BM1E...		40200020	Morsetto unipolare	Unipolar Holdfast	Einpolig- Klammer	Unipolaire serre-câble
20	BM1E...		40200030	Morsetto unipolare	Unipolar Holdfast	Einpolig- Klammer	Unipolaire serre-câble
21	BM1E...		40100027	Commutatore	Changeover switch	Wahlschalter	Commutateur
22	BM1E...		40100042	Termostato di lavoro	Thermostat	Thermostat	Thermostat
23	BM1E...			Neon per lampada	Neon lamp	Neon	Néon pour lampe

Mod. (BM1E120 / BM1E150) + BAS00...

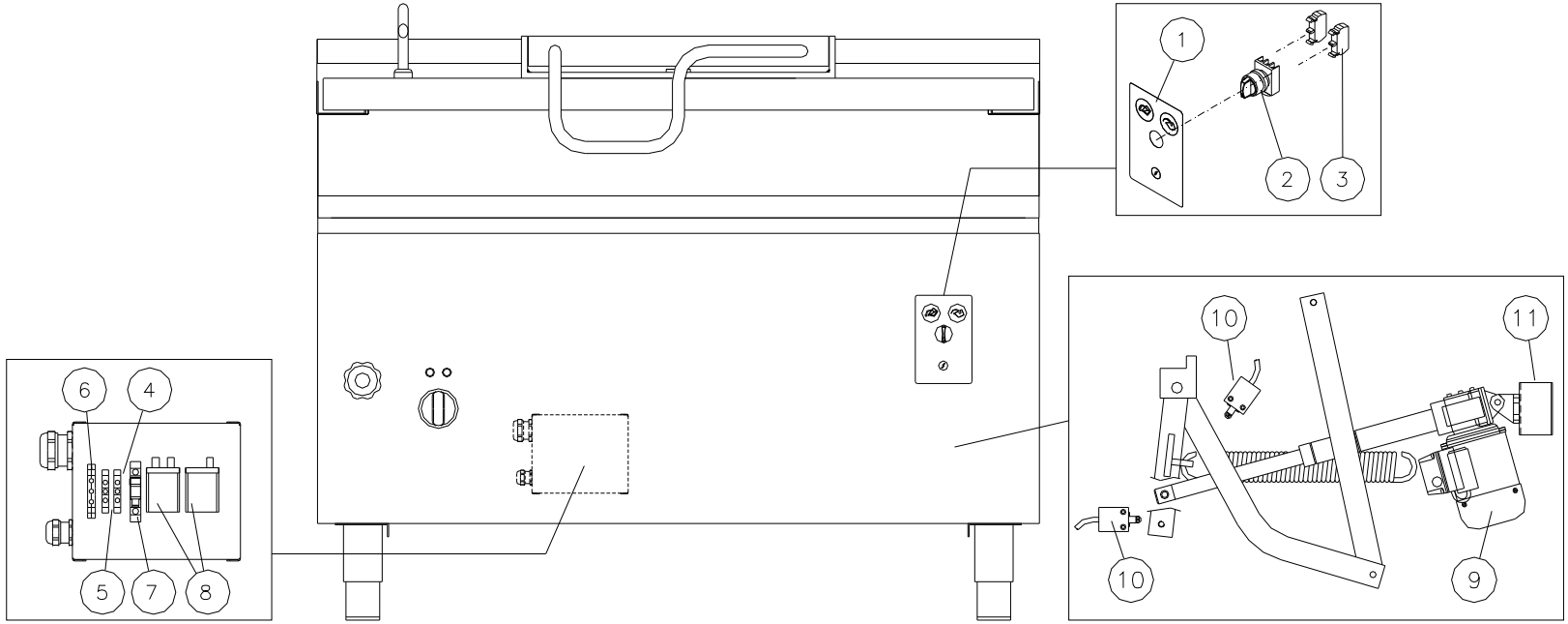

Pos.	Mod.		Cod.	DESCRIZIONE I	DESCRIPTION GB	BESCHREIBUNG D	DESCRIPTION F
01	BM1....		40700294	Mascherina sollev. motoriz.			
02	BM1....		40100026	Selettore 3 posizioni c/rit al centro	Selector 3 positions with return	Wahler 3 position mit zuruck	Sélecteur 3 positions avec retour
03	BM1....		40100112	Blocchetto contatti 1NA	Contact block (normal open contact)	Kontaktblock	Bloc contacts
04	BM1....		40200024	Morsetto unipolare	Unipolar Holdfast	Einpolig- Klammer	Unipolaire serre-câble
05	BM1....		40200022	Morsetto unipolare	Unipolar Holdfast	Einpolig- Klammer	Unipolaire serre-câble
06	BM1....		40200032	Morsetto unipolare	Unipolar Holdfast	Einpolig- Klammer	Unipolaire serre-câble
07	BM1....		40200084	Fusibile	Fuse	Schmelzsicherung	Fusible
08	BM1....	C	40100030	Relè 3 P	Relais 3 P	Dreipoligens Relais	Relais 3 P
09	BM1....		40300122	Attuatore lineare corsa	Actuator linear stroke	Aktuator linear fahrtrichtung	Actionneur ligne course
10	BM1....	C	40100028	Finecorsa a rotella	Limit switch	Endschalter	Fin de course a roulette
11	BM1....		SMB1048-00	Staffa fiss. attuatore			

ESPLOSO BRASIERA ELETTRICA RIBALTABILE BM1E200I

EXPLODED DRAWING ELECTRIC TILTING BRAISING PAN BM1E200I

EXPLOSION-ZEICHNUNG ELEKTRO KIPPBRATPFANNE BM1E200I

VUE ÉCLATÉE SAUTEUSE BASCULANTE ELECTRIQUE BM1E200I

Mod. BM1E200I

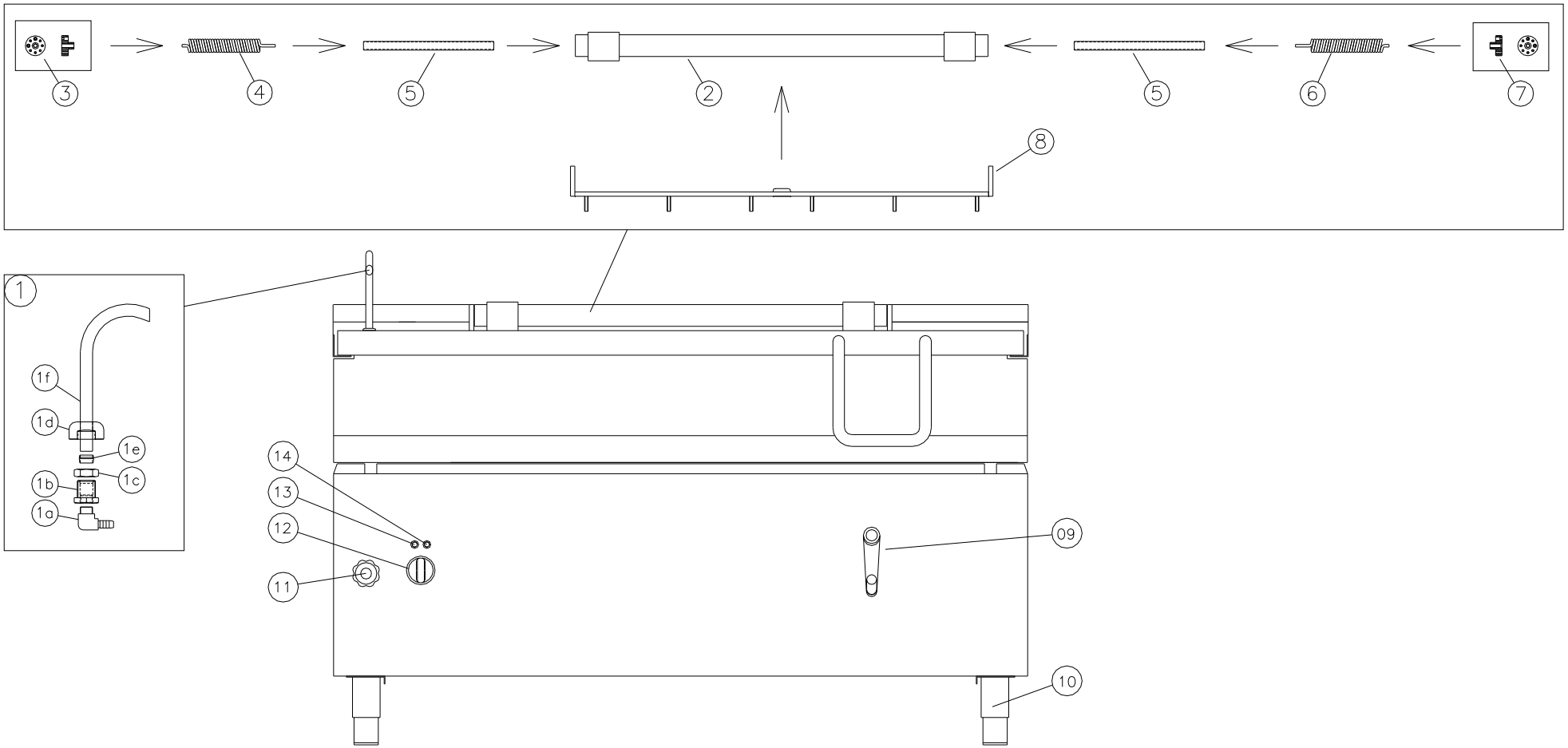

Pos.	Mod.		Cod.	DESCRIZIONE I	DESCRIPTION GB	BESCHREIBUNG D	DESCRIPTION F
1	BM1...		GRP04-0110	*ASS. CANNA CARICO H2O VERTICALE*	*Water inlet pipe*	*Wasserzulaufrohr*	*Tube d'eau*
1a	BM1...		10400154	PORTAGOMMA M 3/8"X10 A GOMITO CROM.			
1b	BM1...		SMB0075-00	MANICOTTO CARICO H2O			
1c	BM1...		SMB0078-00	DADO OTTONE M24X1,5			
1d	BM1...		SMB0076-00	GHIERA FILET.X CANNA CARICO H2O			
1e	BM1...		10400083	BICONO USCITA D.16			
1f	BM1...		SMB0574-00	CANNA D.16 VERT.H2O			
02	BM1.160I-200I		SMB1360-00	Cerniera inox	Hinge inox	Scharnier inox	Charnière inox
03	BM1.160I-200I		SMB1362-00	TESTA SX CERNIERA CROMATA	HINGE HEAD LF CHROM.PLATED	DECKEL LIINKS SCHARNIER	TÊTE GAUC. CHARNERE CHROMEE
04	BM1.160I-200I		SMB0615-00	Molla x cerniera	Hinge Spring	Scharnierenfeder	Ressort pour charnière
05	BM1.160I-200I		SMB0614-00	TUBO PERNO X MOLLA CERNIERA	PIN PIPE SPRING HINGE	HOHLSTIFT FUER FEDER SCHARNIER	TUBE PIVOT X RESSORT CHARNIERE
06	BM1.160I-200I		SMB0617-00	Molla x cerniera	Hinge Spring	Scharnierenfeder	Ressort pour charnière
07	BM1.160I-200I		SMB0610-00	TESTA DX CERNIERA CROMATA	HINGE HEAD RGHT CHROM.PLATED	DECKEL RE. SCHARNIER	TÊTE DROITE CHARNERE CHROMEE
08	BM1.160I-200I		SMB1356-00	Supporto cerniera	Hinge support	Scharnierhalter	Support charnière
09	BM1...		SB0120-00	Volantino completo	Handwheel	Handrad	Volant
10	BM1...		20100020	Ass. piedino da 2" H=165	Foot 2" H=165	Fuss 2" H=165	Pied 2" H=165
11	BM1...		30200008	Rubinetto carico acqua	Water inlet tap	Wasserzulaufhahn	Robinet d'alimentation
12	BM1E...			Manopola 45°- 295°	Knob 45°- 295°	Knebel 45°- 295°	Manette 45°- 295°
13	BM1E...		40200186	Lampada 230 V arancione	Orange signal lamp	Kontrolleuchte orangenfarbig	Voyant orange
14	BM1E...		40200188	Lampada 230 V verde	Green signal lamp	Kontrolleuchte grünenfarbig	Voyant vert

Mod. BM1E200I

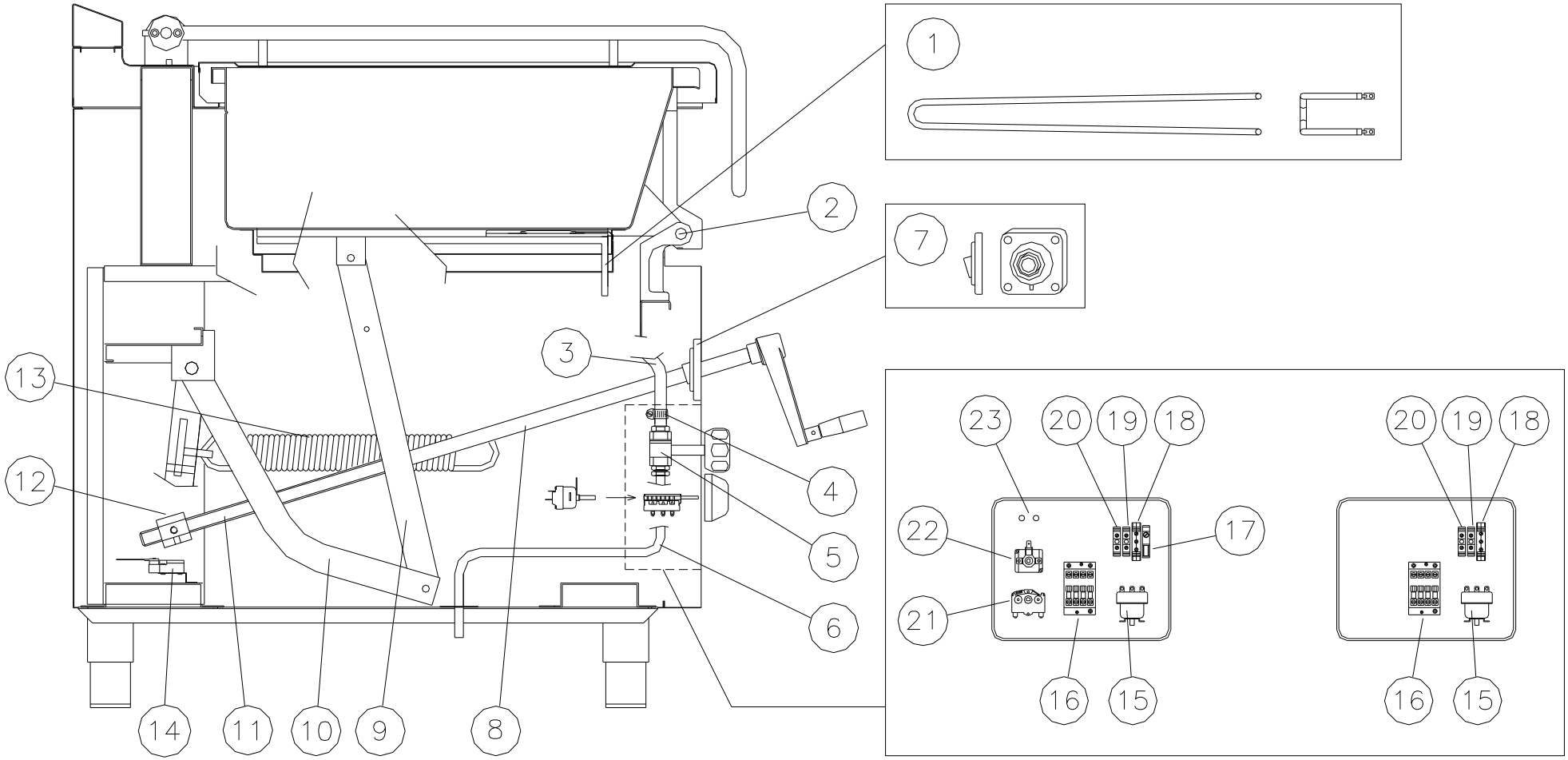

Pos.	Mod.		Cod.	DESCRIZIONE I	DESCRIPTION GB	BESCHREIBUNG D	DESCRIPTION F
01	BM1E...	C	40400084	Resistenza 1650 W – 230 V	Heating element 1650 W – 230 V	Heizung 1650 W – 230 V	Résistance 1650 W – 230 V
02	BM1....		SMB0634-00	Ass. staffa ribaltamento	Flask tilting of pan	Bügel für hubwerk kippbratpfanne	Étrier soulèvement cuve
03	BM1....		10600022	Tubo (silicone) carico H^2O	water inlet pipe	Wasserzulaufrohr	Tube entré d'eau
04	BM1....		10300033	Fascetta	Clip	Schlauchbinder	Ceinture serre-tube
05	BM1....		30200008	Rubinetto carico acqua	Water inlet tap	Wasserzulaufhahn	Robinet d'alimentation
06	BM1....		SMB0066-00	Conduttura carico H^2O	Water inlet pipe	Wasserzulaufrohr	Raccord entré eau
07	BM1....		20400012	Supporto ghisa con cuscinetto	Bearing	Kugellager	Coussinet
08	BM1....		SMB1042-00	Prolunga per vite	Extension for Screw	Verlängerung für Schraube	Prolonge pour vis
09	BM1....		SMB0624-00	Leva sup. sollevamento vasca	Lever for Tilting of pan	Hubhebel kippbratpfanne	Levier soulèvement cuve
10	BM1....		SMB1038-00	Ass. gruppo sollevam. vasca	Tilting of pan	Hubwerk kippbratpfanne	Groupe soulèvement cuve
11	BM1....		SMB0129-00	Vite x gruppo sollevamento vasca	Screw for tilting of pan	Schraubenmutter	Vis soulèvement cuve
12	BM1....	C	SC0022-00	Madrevite	Female screw	Schraubenmutter	Vis mère
13	BM1....		20500030	Molla sollevamento vasca	Spring for tilting of pan	Kompensationsfeder Tiegel	Ressort soulèvement cuve
14	BM1E...	C	40100001	Finecorsa Pizzato FR550	Limit switch	End shalter	Fin de course
15	BM1E...	C	40100062	Termostato di sicurezza	Safety thermostat	Sichereitsthermostat	Thermostat de sécurité
16	BM1E...	C	40100051	Teleruttore 3P+AUX NO 35A AC1-230/50H	Electromagnetic switch	Fernschalter	Télérupteur
17	BM1E...		40200084	Fusibile 5x20 3,15A	Fuse 5x20 3,15A	Schmelzsicherung 5x20 3,15A	Fusible 5x20 3,15A
18	BM1E...		40200010	Morsetto tripolare	Threepole Holdfast	Dreipolig- Klammer	Tripolaire serre-câble
19	BM1E...		40200020	Morsetto unipolare	Unipolar Holdfast	Einpolig- Klammer	Unipolaire serre-câble
20	BM1E...		40200030	Morsetto unipolare	Unipolar Holdfast	Einpolig- Klammer	Unipolaire serre-câble
21	BM1E...		40100027	Commutatore	Changeover switch	Wahlschalter	Commutateur
22	BM1E...		40100042	Termostato di lavoro	Thermostat	Thermostat	Thermostat
23	BM1E...			Neon per lampada	Neon lamp	Neon	Néon pour lampe

Mod. (BM1E200I) + BAS00...

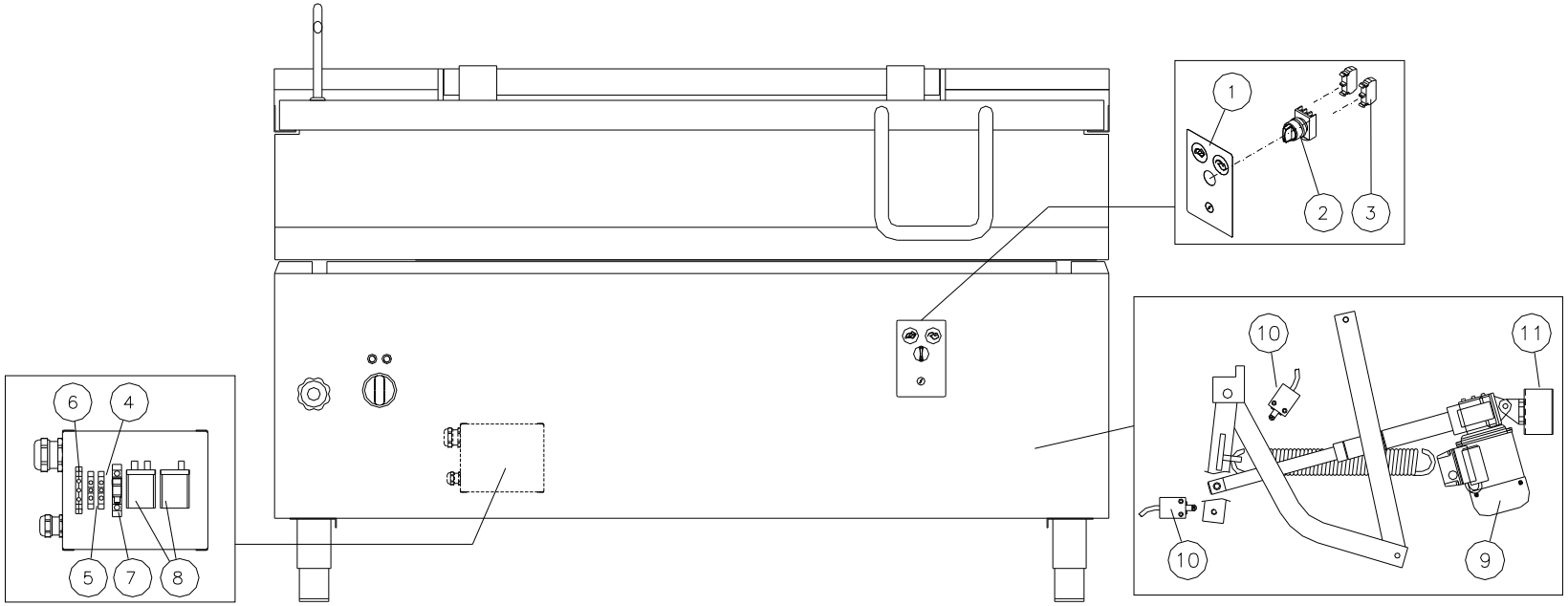

Pos.	Mod.		Cod.	DESCRIZIONE I	DESCRIPTION GB	BESCHREIBUNG D	DESCRIPTION F
01	BM1....		40700294	Mascherina sollev. motoriz.			
02	BM1....		40100026	Selettore 3 posizioni c/rit al centro	Selector 3 positions with return	Wahler 3 position mit zuruck	Sélecteur 3 positions avec retour
03	BM1....		40100112	Blocchetto contatti 1NA	Contact block (normal open contact)	Kontaktblock	Bloc contacts
04	BM1....		40200024	Morsetto unipolare	Unipolar Holdfast	Einpolig- Klammer	Unipolaire serre-câble
05	BM1....		40200022	Morsetto unipolare	Unipolar Holdfast	Einpolig- Klammer	Unipolaire serre-câble
06	BM1....		40200032	Morsetto unipolare	Unipolar Holdfast	Einpolig- Klammer	Unipolaire serre-câble
07	BM1....		40200084	Fusibile	Fuse	Schmelzsicherung	Fusible
08	BM1....	C	40100030	Relè 3 P	Relais 3 P	Dreipoligens Relais	Relais 3 P
09	BM1....		40300122	Attuatore lineare corsa	Actuator linear stroke	Aktuator linear fahrtrichtung	Actionneur ligne course
10	BM1....	C	40100028	Finecorsa a rotella	Limit switch	Endschalter	Fin de course a roulette
11	BM1....		SMB1048-00	Staffa fiss. attuatore			