ESPLOSO BRASIERA GAS RIBALTABILE

EXPLODED DRAWING GAS TILTING BRAISING PAN

EXPLOSION-ZEICHNUNG GASBEHEIZTE KIPPBRATPFANNE

VUE ÉCLATÉE SAUTEUSE BASCULANTE Á GAZ

(Sr. 900)

Mod.

BM8G080 / BM9G090 / BM1G120 / BM1G150 / BM1G160I / BM1G200I

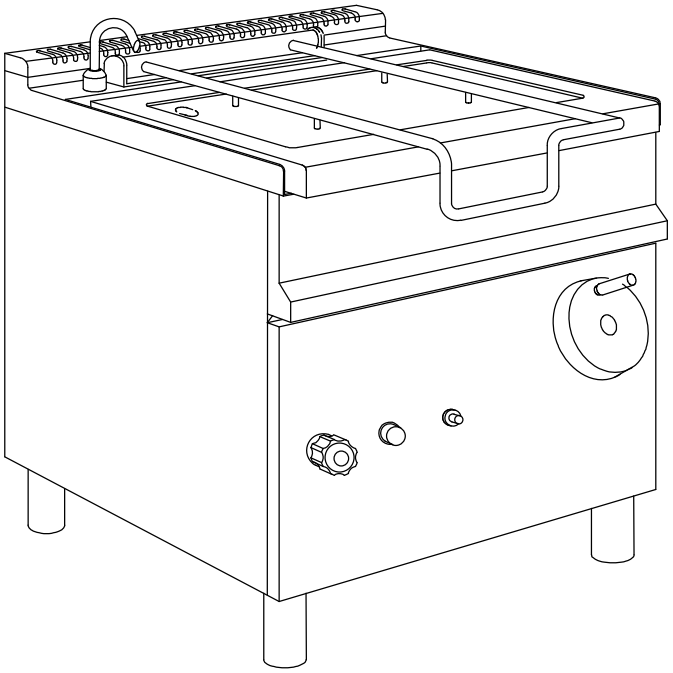

Storia delle revisioni

Punti modificati e natura delle correzioni

Nr. Revis.	Data di revis.	Punto	Natura della correzione	Type of correction	Verbesserungsart	Type de correction
03	29/09/2005	...	Aggiunto BM1G150 / BM1G160I / BM1G200I	Added BM1G150 / BM1G160I / BM1G200I	Zuschlag BM1G150 / BM1G160I / BM1G200I	Ajout BM1G150 / BM1G160I / BM1G200I
04	06/09/2007		Mod. Vite sollevamento			
05	29/02/2008		Aggiornato esploso	Up to date exploded drawings	Zeitnahe Explosion-Zeichnung	Vue éclatée a journée
06	30/05/2013		Aggiornato esploso	Up to date exploded drawings	Zeitnahe Explosion-Zeichnung	Vue éclatée a journée

COD.ESPL. : **20-01 ESP.BM8G-9G-1G**

Validita' esploso
Exploded view validity
Gültigkeit der explosionszeichnung
Validitè de la vue èclatèe

MOD.	Da nr.matr. From serial number Ab Gerätenummer Du nr. d'immatr.	A nr.matr. To serial number Bis Gerätenummer Au nr. d'immatri.
BM8G080	028090PC15/2011	
BM8G080I	027550ON10/2010	
BM8G080C	027549ON10/2010	
BM9G090	028336PD26/2011	
BM9G090I	028219PD05/2011	
BM9G090C	029229PI07/2011	
BAS0020	022872NB16/2009	
BM1G120	027925PB18/2011	
BM1G120I	027482OM29/2010	
BM1G120C	028634PF15/2011	

BM1G150	**029376PI26/2011**	
BM1G150I	**029685PM07/2011**	
BM1G150C	**032467RA23/2013**	
BAS0030	**022749NB02/2009**	
BM1G160I	**027958PB22/2011**	
BM1G200I	**027934PB22/2011**	
BAS0040	**024735NM16/2009**	

ESPLOSO BRASIERA GAS RIBALTABILE
BM8G080 / BM9G090

EXPLODED DRAWING GAS TILTING BRAISING PAN
BM8G080 / BM9G090

EXPLOSION-ZEICHNUNG GASBEHEIZTE KIPPBRATPFANNE
BM8G080 / BM9G090

VUE ÉCLATÉE SAUTEUSE BASCULANTE Á GAZ
BM8G080 / BM9G090

Mod. BM8G080 / BM9G090

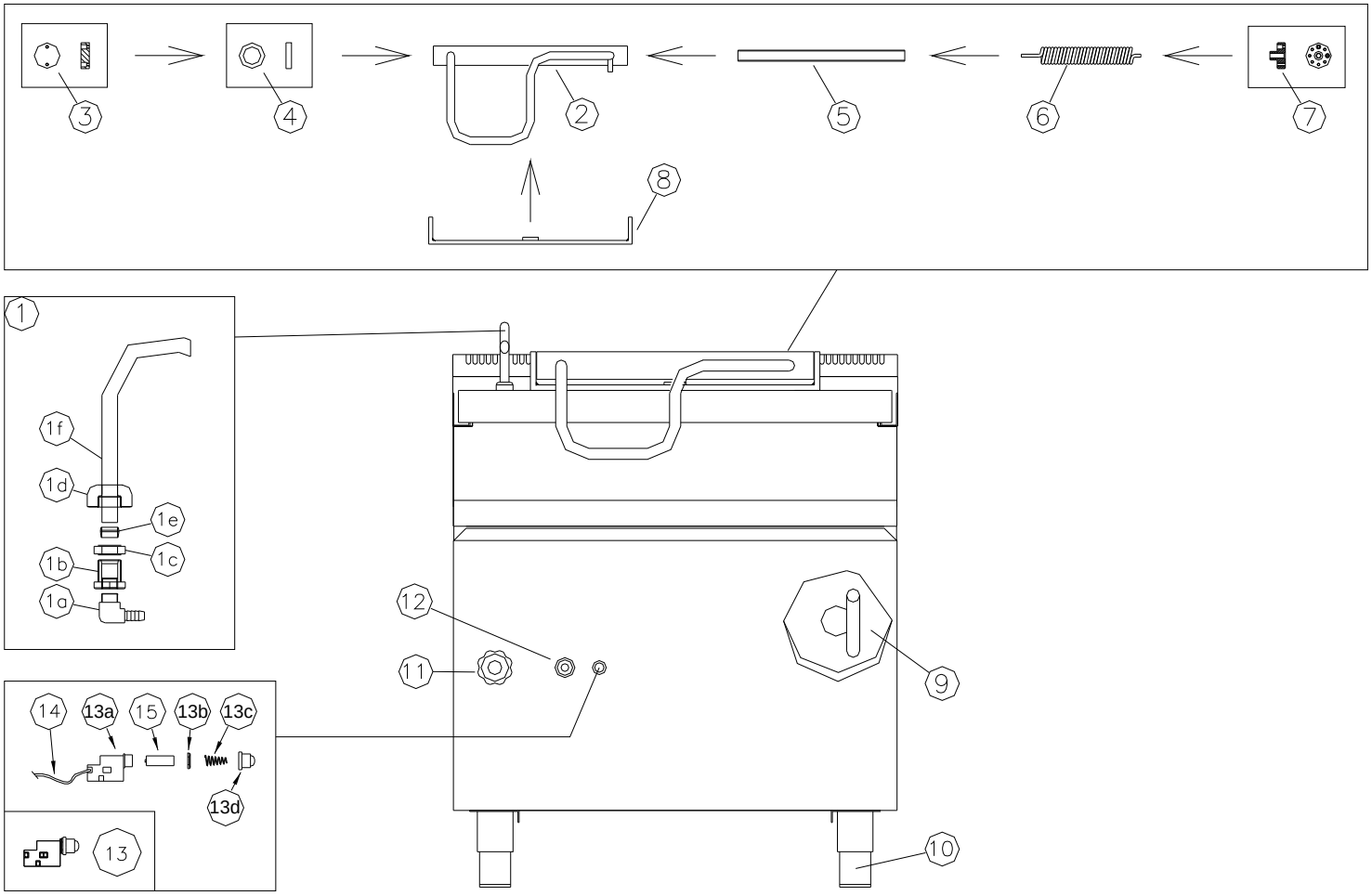

Pos.	Mod.		Cod.	DESCRIZIONE I	DESCRIPTION GB	BESCHREIBUNG D	DESCRIPTION F
1	BM8/9...		GRP04-0110	*ASS. CANNA CARICO H2O VERTICALE*	*Water inlet pipe*	*Wasserzulaufrohr*	*Tube d'eau*
1a	BM8/9...		10400154	PORTAGOMMA M 3/8"X10 A GOMITO CROM.			
1b	BM8/9...		SMB0075-00	MANICOTTO CARICO H2O			
1c	BM8/9...		SMB0078-00	DADO OTTONE M24X1,5			
1d	BM8/9...		SMB0076-00	GHIERA FILET.X CANNA CARICO H2O			
1e	BM8/9...		10400083	BICONO USCITA D.16			
1f	BM8/9...		SMB0574-00	CANNA D.16 VERT.H2O			
02	BM8/9...		SMB0608-00	Maniglia	Handle	Griff	Poignée
03	BM8/9...		SMB0612-00	TESTA SX CERNIERA CROMATA	HINGE HEAD LF CHROM.PLATED	DECKEL LIINKS SCHARNIER	TÊTE GAUC. CHARNERE CHROMEE
04	BM8/9...		SMB0618-00	ANELLO DI RASAMENTO X CERNIERA	SHAVE RING FOR BRAISING PAN HINGE	SCHER RING FUER SCHARNIER	ANNEAU POUR CHARNIERE SAUTEUSE
05	BM8/9...		SMB0614-00	TUBO PERNO X MOLLA CERNIERA	PIN PIPE SPRING HINGE	HOHLSTIFT FUER FEDER SCHARNIER	TUBE PIVOT X RESSORT CHARNIERE
06	BM8/9...		SMB0616-00	Molla x cerniera	Hinge Spring	Scharnierenfeder	Ressort pour charnière
07	BM8/9...		SMB0610-00	TESTA DX CERNIERA CROMATA	HINGE HEAD RGHT CHROM.PLATED	DECKEL RE. SCHARNIER	TÊTE DROITE CHARNERE CHROMEE
08	BM8/9...		SMB0606-00	Supporto cerniera	Hinge support	Scharnierhalter	Support charnière
09	BM8/9...		SMB0636-00	Volantino completo	Handwheel	Handrad	Volant
10	BM8/9...		20100020	Ass. piedino da 2" H=165	Foot 2" H=165	Fuss 2" H=165	Pied 2" H=165
11	BM8/9...		30200008	Rubinetto carico acqua	Water inlet tap	Wasserzulaufhahn	Robinet d'alimentation
12	BM8/9G...		30100080	Valvola gas	Gas valve	Gasventil	Soupape gaz
13	BM8/9G...		40100132	*Pulsante accensione a pila*	*Starting button*	*Elektr. Zundung Shalter*	*Touche allumage*
13a	BM8/9G...			Corpo accensione a pila	Body ignition to battery	Gehäuse Zündung Batterie	Corps allumage à pile
13b	BM8/9G...			Dado fissaggio	Dice implantation	Mutter Befestigung	Dé fixation
13c	BM8/9G...			Molla accensione a pila	Motivating force ignition to battery	Feder Zündung Batterie	Ressort allumage à pile
13d	BM8/9G...			Cappuccio accensione a pila	Pointed hood ignition to battery	Schutzkappe Zündung Batterie	Capuchon allumage à pile
14	BM8/9G...		40100133	Cavo accensione a pila	Cable ignition to battery	Kabel Zündung Batterie	Cable allumage à pile
15	BM8/9G...		40200107	Pila accensione 1,5 v	Pile 1,5V x ignition	Batterie 1,5V x Zundsystem	Pile 1,5V x allumage

Mod. BM8G080 / BM9G090

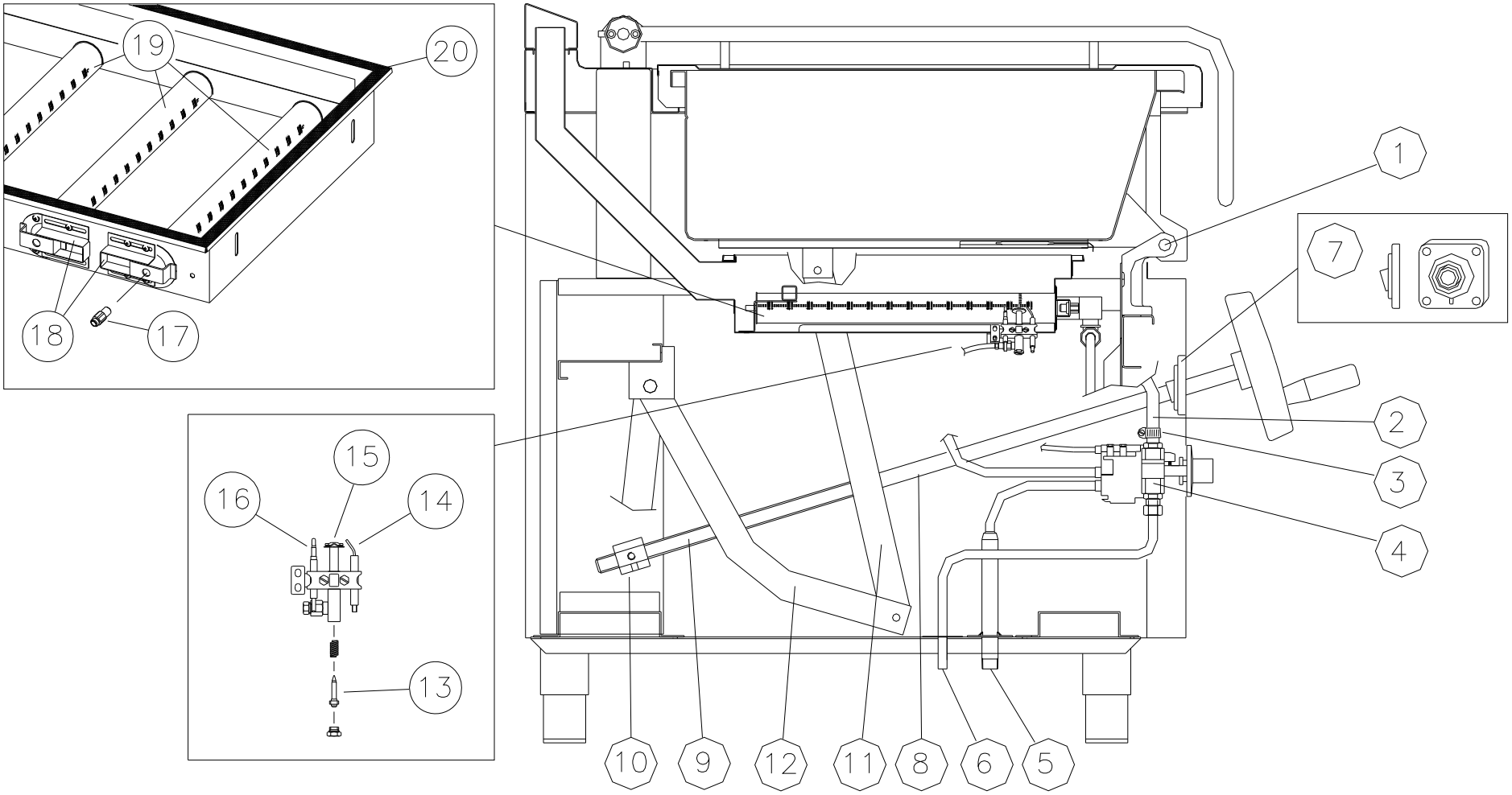

Pos.	Mod.		Cod.	DESCRIZIONE I	DESCRIPTION GB	BESCHREIBUNG D	DESCRIPTION F
01	BM8/9….		SMB0634-00	Ass. staffa ribaltamento	Flask tilting of pan	Bügel für hubwerk kippbratpfanne	Étrier soulèvement cuve
02	BM8/9….		10600022	Tubo (silicone) carico H^2O	water inlet pipe	Wasserzulaufrohr	Tube entré d'eau
03	BM8/9….		10300033	Fascetta	Clip	Schlauchbinder	Ceinture serre-tube
04	BM8/9….		30200008	Rubinetto carico acqua	Water inlet tap	Wasserzulaufhahn	Robinet d'alimentation
05	BM8/9G...		SMB0064-00	Ass. rampa entrata gas	Ramp gas inlet	Rampe gas eingang	Rampe entré gaz
06	BM8/9....		SMB0066-00	Conduttura carico H^2O	Water inlet pipe	Wasserzulaufrohr	Raccord entré eau
07	BM8/9….		20400012	Supporto ghisa con cuscinetto	Bearing	Kugellager	Coussinet
08	BM8/9….		SMB0630-00	Prolunga per vite	Extension for Screw	Verlängerung für Schraube	Prolonge pour vis
09	BM8/9….		SMB0129-00	Vite x gruppo sollevamento vasca	Screw for tilting of pan	Schraubenmutter	Vis soulèvement cuve
10	BM8/9....	C	SC0022-00	Madrevite	Female screw	Schraubenmutter	Vis mère
11	BM8/9….		SMB0624-00	Leva sup. sollevamento vasca	Lever for Tilting of pan	Hubhebel kippbratpfanne	Levier soulèvement cuve
12	BM8/9….		SMB0620-00	Ass. gruppo sollevam. vasca	Tilting of pan	Hubwerk kippbratpfanne	Groupe soulèvement cuve
13	BM8/9G...		30500003 30500004	Ø 40 x G20 Ø 25 x G30	Ø 40 x G20 Ø 25 x G30	Ø 40 x G20 Ø 25 x G30	Ø 40 x G20 Ø 25 x G30
14	BM8/9G...		30100054	Candela	Ignitor	Kerze	Bougie
15	BM8/9G...		30100005	Pilota	Pilot	Zündflammenbrenner	Pilote
16	BM8/9G...		40400110	Termocoppia	Thermocouple	Thermoelement	Thermocouple
				Ugello	Injector	Düse	Gicleur
17	BM8/9G...		30500060 30500074 30500074 30500020 30500072	G20 20 mbar Ø270 G25 25 mbar Ø305 G25 20 mbar Ø305 G30 30 mbar Ø120 G30 50 mbar Ø105	G20 20 mbar Ø270 G25 25 mbar Ø305 G25 20 mbar Ø305 G30 30 mbar Ø120 G30 50 mbar Ø105	G20 20 mbar Ø270 G25 25 mbar Ø305 G25 20 mbar Ø305 G30 30 mbar Ø120 G30 50 mbar Ø105	G20 20 mbar Ø270 G25 25 mbar Ø305 G25 20 mbar Ø305 G30 30 mbar Ø120 G30 50 mbar Ø105
18	BM8/9G...		SC1404-00	Squadretta regolazione aria	Air regulator	Luftregler	Régulateur d'air
19	BM8/9G...	C	30400050	Bruciatore	Burner	Brenner	Brûleur
20	BM8/9G...		60500100	Treccia Vetros D.13mm	Insulation Cord	Insulation Cord	Tresse Vetros D.13mm

Mod. (BM8G080 / BM9G090) + BAS00..

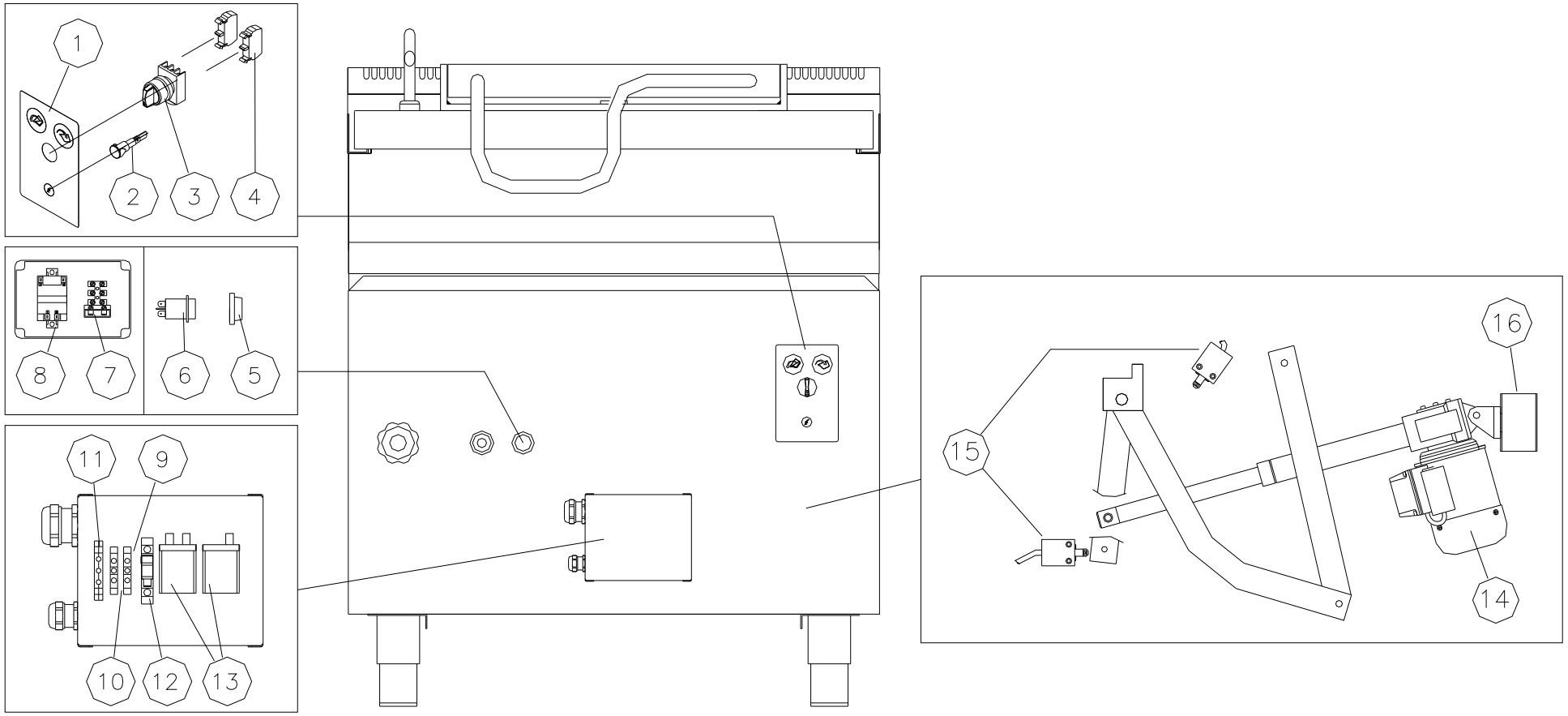

Pos.	Mod.		Cod.	DESCRIZIONE I	DESCRIPTION GB	BESCHREIBUNG D	DESCRIPTION F
01	BM8/9….		40700294	Mascherina sollev. motoriz.			
02	BM8/9G...		40200152	Lamp. Cristallo verde	Green signal	Kontrolleuchte grünenfarbig	Voyant de couleur vert
03	BM8/9….		40100026	Selettore 3 posizioni c/rit al centro	Selector 3 positions with return	Wahler 3 position mit zuruck	Sélecteur 3 positions avec retour
04	BM8/9....		40100112	Blocchetto contatti 1NA	Contact block (normal open contact)	Kontaktblock	Bloc contacts
05	BM8/9….		40100036	Copri pulsante accensione	Covering botton Transparent	Decke Shalter Transparent	Couverture touche Transparente
06	BM8/9….		40100034	Pulsante accensione	Starting botton	Elektr. Zundung Shalter	Touche allumage
07	BM8/9….		40200084	Fusibile	Fuse	Schmelzsicherung	Fusible
08	BM8/9....		40200112	Trasformatore x accensione	Transformer x ignition	Transformator x Zundsystem	Transformateur x allumage
09	BM8/9….		40200024	Morsetto unipolare	Unipolar Holdfast	Einpolig- Klammer	Unipolaire serre-câble
10	BM8/9….		40200022	Morsetto unipolare	Unipolar Holdfast	Einpolig- Klammer	Unipolaire serre-câble
11	BM8/9….		40200032	Morsetto unipolare	Unipolar Holdfast	Einpolig- Klammer	Unipolaire serre-câble
12	BM8/9....		40200084	Fusibile	Fuse	Schmelzsicherung	Fusible
13	BM8/9….	C	40100030	Relè 3 P	Relais 3 P	Dreipoligens Relais	Relais 3 P
14	BM8/9….		40300122	Attuatore lineare corsa	Actuator linear stroke	Aktuator linear fahrtrichtung	Actionneur ligne course
15	BM8/9….	C	40100028	Finecorsa a rotella	Limit switch	Endschalter	Fin de course à roulette
16	BM8/9….		SMB1048-00	Staffa fiss. attuatore			

ESPLOSO BRASIERA GAS RIBALTABILE
BM1G120 / BM1G150

EXPLODED DRAWING GAS TILTING BRAISING PAN
BM1G120 / BM1G150

EXPLOSION-ZEICHNUNG GASBEHEIZTE KIPPBRATPFANNE
BM1G120 / BM1G150

VUE ÉCLATÉE SAUTEUSE BASCULANTE Á GAZ
BM1G120 / BM1G150

Mod. BM1G120 / BM1G150

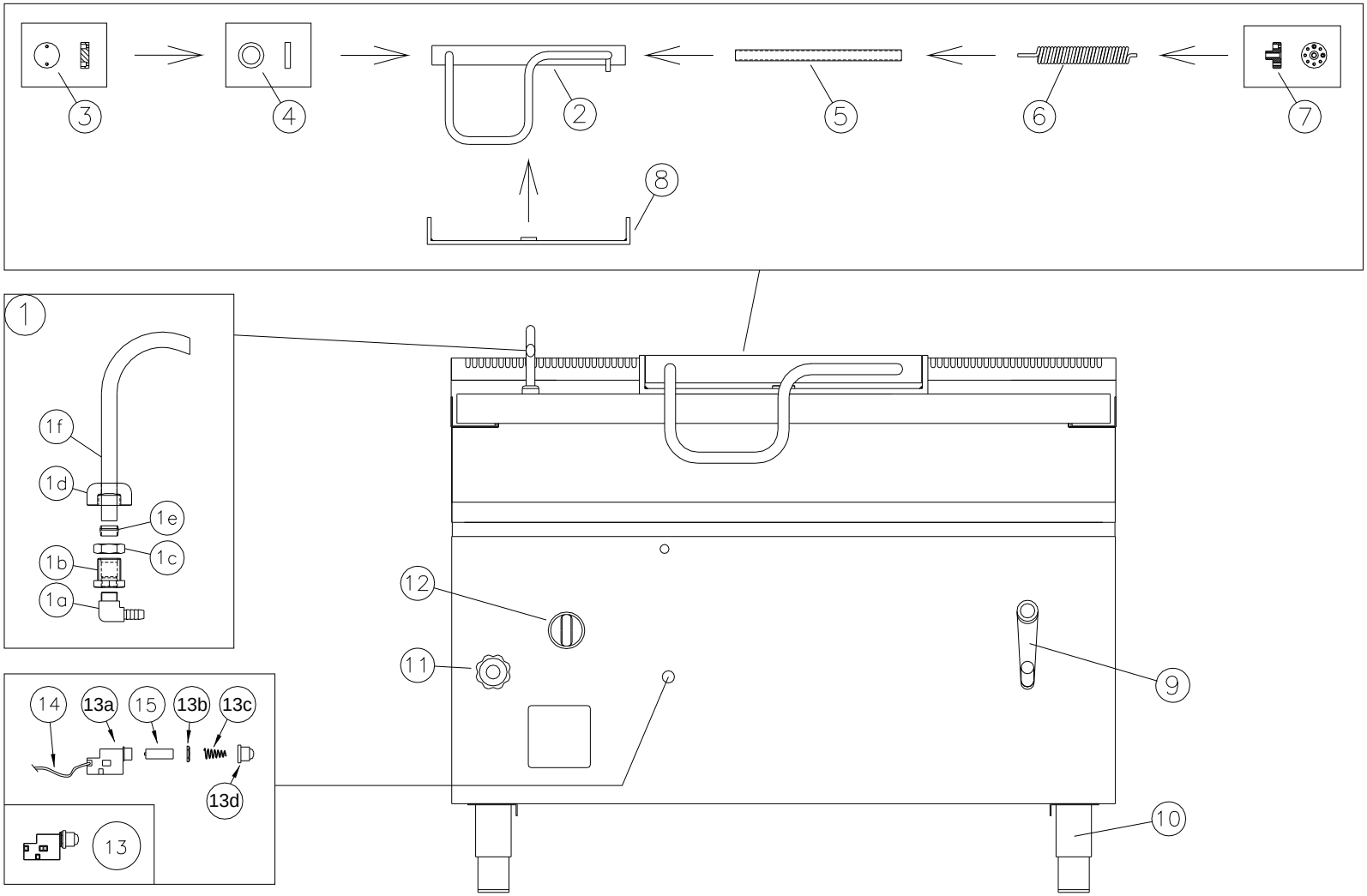

Pos.	Mod.		Cod.	DESCRIZIONE I	DESCRIPTION GB	BESCHREIBUNG D	DESCRIPTION F
1	BM1...		GRP04-0110	*ASS. CANNA CARICO H2O VERTICALE*	*Water inlet pipe*	*Wasserzulaufrohr*	*Tube d'eau*
1a	BM1...		10400154	PORTAGOMMA M 3/8"X10 A GOMITO CROM.			
1b	BM1...		SMB0075-00	MANICOTTO CARICO H2O			
1c	BM1...		SMB0078-00	DADO OTTONE M24X1,5			
1d	BM1...		SMB0076-00	GHIERA FILET.X CANNA CARICO H2O			
1e	BM1...		10400083	BICONO USCITA D.16			
1f	BM1...		SMB0574-00	CANNA D.16 VERT.H2O			
02	BM1...		SMB0608-00	Maniglia	Handle	Griff	Poignée
03	BM1...		SMB0612-00	TESTA SX CERNIERA CROMATA	HINGE HEAD LF CHROM.PLATED	DECKEL LIINKS SCHARNIER	TÊTE GAUC. CHARNERE CHROMEE
04	BM1...		SMB0618-00	ANELLO DI RASAMENTO X CERNIERA	SHAVE RING FOR BRAISING PAN HINGE	SCHER RING FUER SCHARNIER	ANNEAU POUR CHARNIERE SAUTEUSE
05	BM1...		SMB0614-00	TUBO PERNO X MOLLA CERNIERA	PIN PIPE SPRING HINGE	HOHLSTIFT FUER FEDER SCHARNIER	TUBE PIVOT X RESSORT CHARNIERE
06	BM1...		*SMB0617-00*	Molla x cerniera	Hinge Spring	Scharnierenfeder	Ressort pour charnière
07	BM1...		SMB0610-00	TESTA DX CERNIERA CROMATA	HINGE HEAD RGHT CHROM.PLATED	DECKEL RE. SCHARNIER	TÊTE DROITE CHARNERE CHROMEE
08	BM1...		SMB0606-00	Supporto cerniera	Hinge support	Scharnierhalter	Support charnière
09	BM1...		SB0120-00	Volantino completo	Handwheel	Handrad	Volant
10	BM1...		20100020	Ass. piedino da 2" H=165	Foot 2" H=165	Fuss 2" H=165	Pied 2" H=165
11	BM1...		30200008	Rubinetto carico acqua	Water inlet tap	Wasserzulaufhahn	Robinet d'alimentation
12	BM1G...			Manopola termostato	Knob for Thermostat	Knebel für Thermostat	Manette pour thermostat
13	BM1G...		40100132	*Pulsante accensione a pila*	*Starting button*	*Elektr. Zundung Shalter*	*Touche allumage*
13a	BM1G...			Corpo accensione a pila	Body ignition to battery	Gehäuse Zündung Batterie	Corps allumage à pile
13b	BM1G...			Dado fissaggio	Dice implantation	Mutter Befestigung	Dé fixation
13c	BM1G...			Molla accensione a pila	Motivating force ignition to battery	Feder Zündung Batterie	Ressort allumage à pile
13d	BM1G...			Cappuccio accensione a pila	Pointed hood ignition to battery	Schutzkappe Zündung Batterie	Capuchon allumage à pile
14	BM1G...		40100133	Cavo accensione a pila	Cable ignition to battery	Kabel Zündung Batterie	Cable allumage à pile
15	BM1G...		40200107	Pila accensione 1,5 v	Pile 1,5V x ignition	Batterie 1,5V x Zundsystem	Pile 1,5V x allumage

Mod. BM1G120 / BM1G150

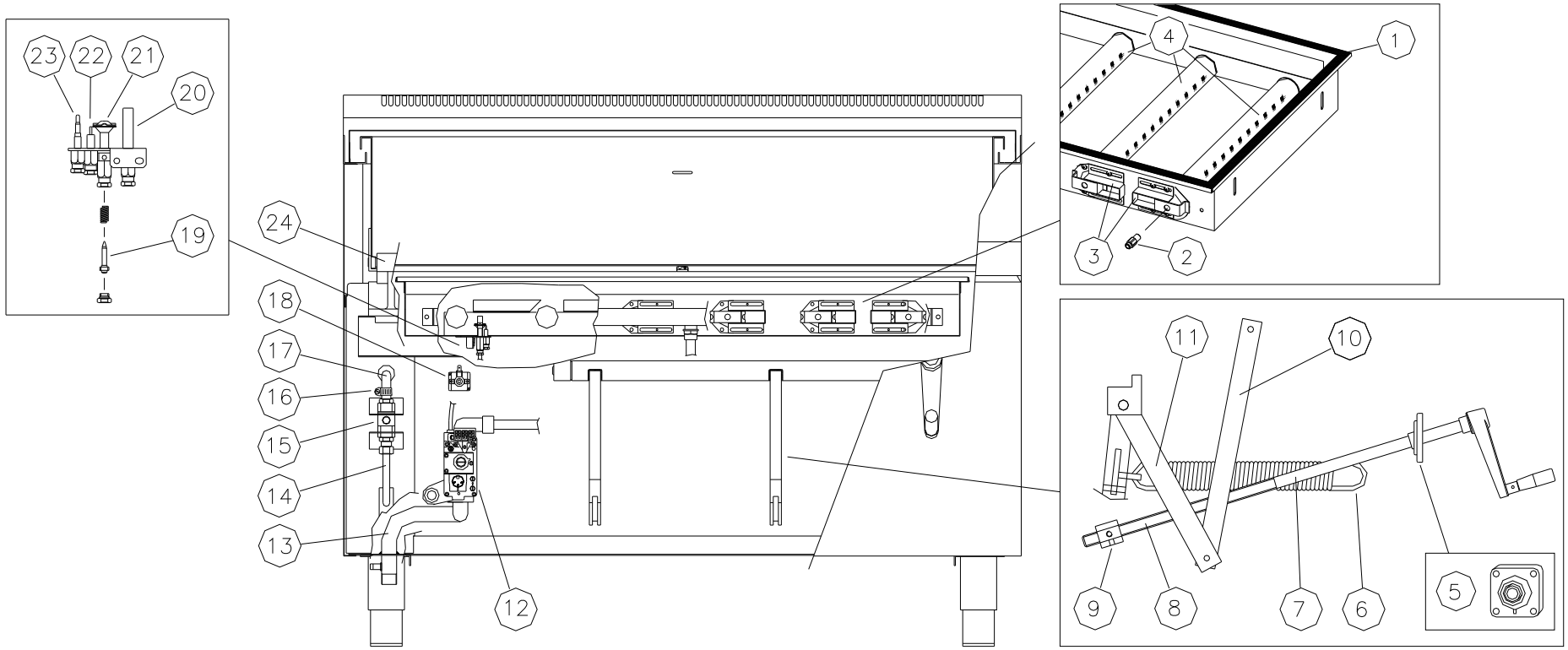

Pos.	Mod.		Cod.	Descrizione I	Description GB	Beschreibung D	Description F
01	BM1G...	C	60500100	Treccia Vetros D.13mm	Insulation Cord	Insulation Cord	Tresse Vetros D.13mm
02				Ugello	Injector	Düse	Gicleur
	BM1G120. BM1G150.		30500048 30500038 30500064 30500020 30500036	G20 20 mbar Ø175 G25 25 mbar Ø185 G25 20 mbar Ø195 G30 29 mbar Ø120 G30 50 mbar Ø100	G20 20 mbar Ø175 G25 25 mbar Ø185 G25 20 mbar Ø195 G30 29 mbar Ø120 G30 50 mbar Ø100	G20 20 mbar Ø175 G25 25 mbar Ø185 G25 20 mbar Ø195 G30 29 mbar Ø120 G30 50 mbar Ø100	G20 20 mbar Ø175 G25 25 mbar Ø185 G25 20 mbar Ø195 G30 29 mbar Ø120 G30 50 mbar Ø100
03	BM1G...		SC1404-00	Squadretta regolazione aria	Air regulator	Luftregler	Régulateur d'air
04	BM1G...	C	30400050	Bruciatore	Burner	Brenner	Brûleur
05	BM1....		20400012	Supporto ghisa con cuscinetto	Bearing	Kugellager	Coussinet
06	BM1....		20500030	Molla sollevamento vasca	Spring for tilting of pan	Kompensationsfeder Tiegel	Ressort soulèvement cuve
07	BM1....		SMB1042-00	Prolunga per vite	Extension for Screw	Verlängerung für Schraube	Prolonge pour vis
08	BM1....		SMB0129-00	Vite x gruppo sollevamento vasca	Screw for tilting of pan	Schraubenmutter	Vis basculement cuve
09	BM1....	C	SC0022-00	Madrevite	Female screw	Schraubenmutter	Vis mère
10	BM1....		SMB0624-00	Leva sup. sollevam. vasca	Lever for Tilting of pan	Hubhebel kippbratpfanne	Levier soulèvement cuve
11	BM1....		SMB1040-00	Ass. gruppo sollevam. vasca	Tilting of pan	Hubwerk kippbratpfanne	Groupe soulèvement cuve
12	BM1G...		30100014	Elettrovalvola gas	Gas solenoid valve	Gasmagnetventil	Electro-soupape eau
13	BM1G...		SMB1060-00	Ass. rampa entrata gas	Ramp gas inlet	Rampe gas eingang	Rampe entrée gaz
14	BM1....		SMB0066-00	Conduttura carico H^2O	Water inlet pipe	Wasserzulaufrohr	Raccord entrée eau
15	BM1....		30200008	Rubinetto carico acqua	Water inlet tap	Wasserzulaufhahn	Robinet d'alimentation
16	BM1....		10300033	Fascetta AISI 304 c/vite OTTONE	S.steel clip Typ n19	Schlauchbinder Typ n19 CHROM-NICKEL	Ceinture serre-tube AISI 304 avec vis en cuivre
17	BM1....		10600022	Tubo (silicone) carico H^2O	Water inlet pipe	Wasserzulaufrohr	Tube entré d'eau
18	BM1....		40100042	Termostato di lavoro	Thermostat	Thermostat	Thermostat
19	BM1G...		30500007 30500006	Ø 51 x G20 Ø 30 x G30	Ø 51 x G20 Ø 30 x G30	Ø 51 x G20 Ø 30 x G30	Ø 51 x G20 Ø 30 x G30
20	BM1G...		40400130	Termopila	Thermopile	Thermosaule	Thermopile
21	BM1G...		30100000	Pilota	Pilot	Zündflammenbrenner	Pilote
22	BM1G...		30100052	Candela	Ignitor	Kerze	Bougie
23	BM1G...		40400110	Termocoppia	Thermocouple	Thermoelement	Thermocouple
24	BM1....		SMB0634-00	Ass. staffa ribaltamento	Flask tilting of pan	Bügel für hubwerk kippbratpfanne	Étrier soulèvement cuve

Mod. (BM1G120 / BM1G150) + BAS00..

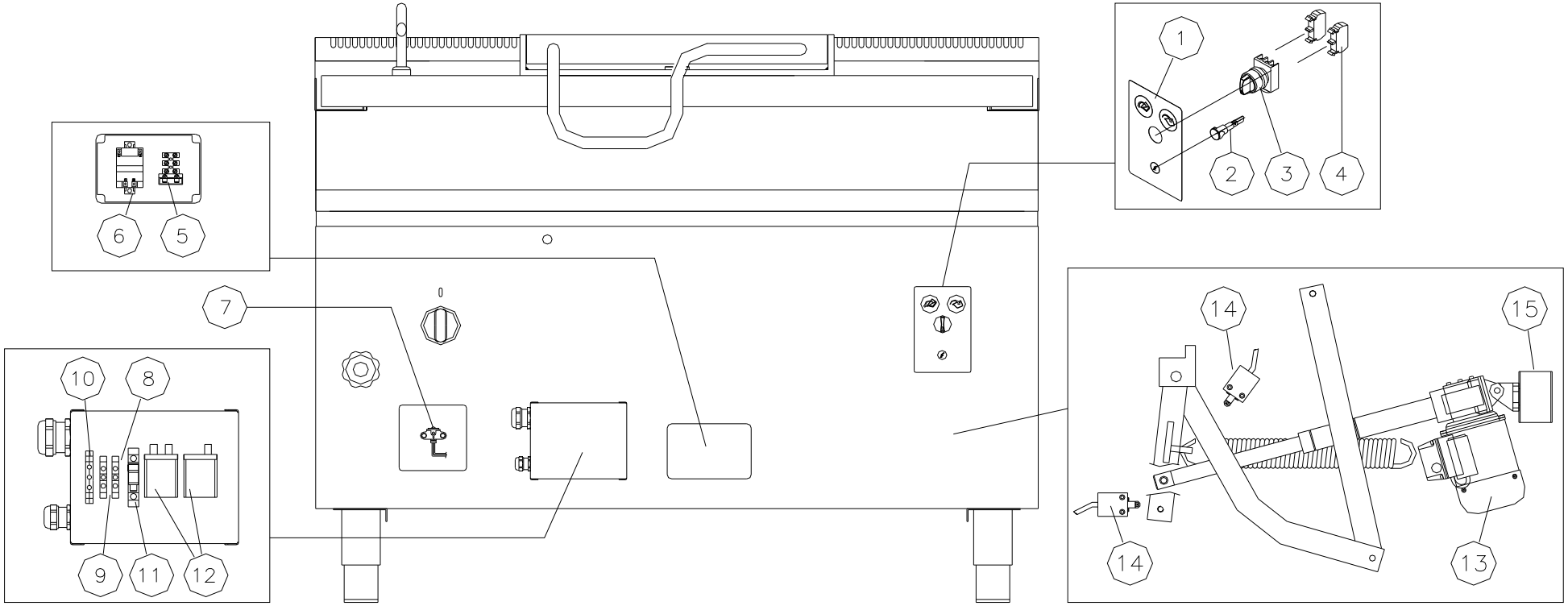

Pos.	Mod.		Cod.	DESCRIZIONE I	DESCRIPTION GB	BESCHREIBUNG D	DESCRIPTION F
01	BM1....		40700294	Mascherina sollev. motoriz.			
02	BM1G...		40200152	Lamp. Cristallo verde	Green signal	Kontrolleuchte grünenfarbig	Voyant de couleur vert
03	BM1....		40100026	Selettore 3 posizioni c/rit al centro	Selector 3 positions with return	Wahler 3 position mit zuruck	Sélecteur 3 positions avec retour
04	BM1....		40100112	Blocchetto contatti 1NA	Contact block (normal open contact)	Kontaktblock	Bloc contacts
05	BM1....		40200084	Fusibile	Fuse	Schmelzsicherung	Fusible
06	BM1....		40200112	Trasformatore x accensione	Transformer x ignition	Transformator x Zundsystem	Transformateur x allumage
07	BM1....		40100019	Microinterruttore			
08	BM1....		40200024	Morsetto unipolare	Unipolar Holdfast	Einpolig- Klammer	Unipolaire serre-câble
09	BM1....		40200022	Morsetto unipolare	Unipolar Holdfast	Einpolig- Klammer	Unipolaire serre-câble
10	BM1....		40200032	Morsetto unipolare	Unipolar Holdfast	Einpolig- Klammer	Unipolaire serre-câble
11	BM1....		40200084	Fusibile	Fuse	Schmelzsicherung	Fusible
12	BM1....	C	40100030	Relè 3 P	Relais 3 P	Dreipoligens Relais	Relais 3 P
13	BM1....		40300122	Attuatore lineare corsa	Actuator linear stroke	Aktuator linear fahrtrichtung	Actionneur ligne course
14	BM1....	C	40100028	Finecorsa a rotella	Limit switch	Endschalter	Fin de course à roulette
15	BM1....		SMB1048-00	Staffa fiss. attuatore			

ESPLOSO BRASIERA GAS RIBALTABILE
BM1G160I / BM1G200I

EXPLODED DRAWING GAS TILTING BRAISING PAN
BM1G160I / BM1G200I

EXPLOSION-ZEICHNUNG GASBEHEIZTE KIPPBRATPFANNE
BM1G160I / BM1G200I

VUE ÉCLATÉE SAUTEUSE BASCULANTE Á GAZ
BM1G160I / BM1G200I

Mod. BM1G160I / BM1G200I

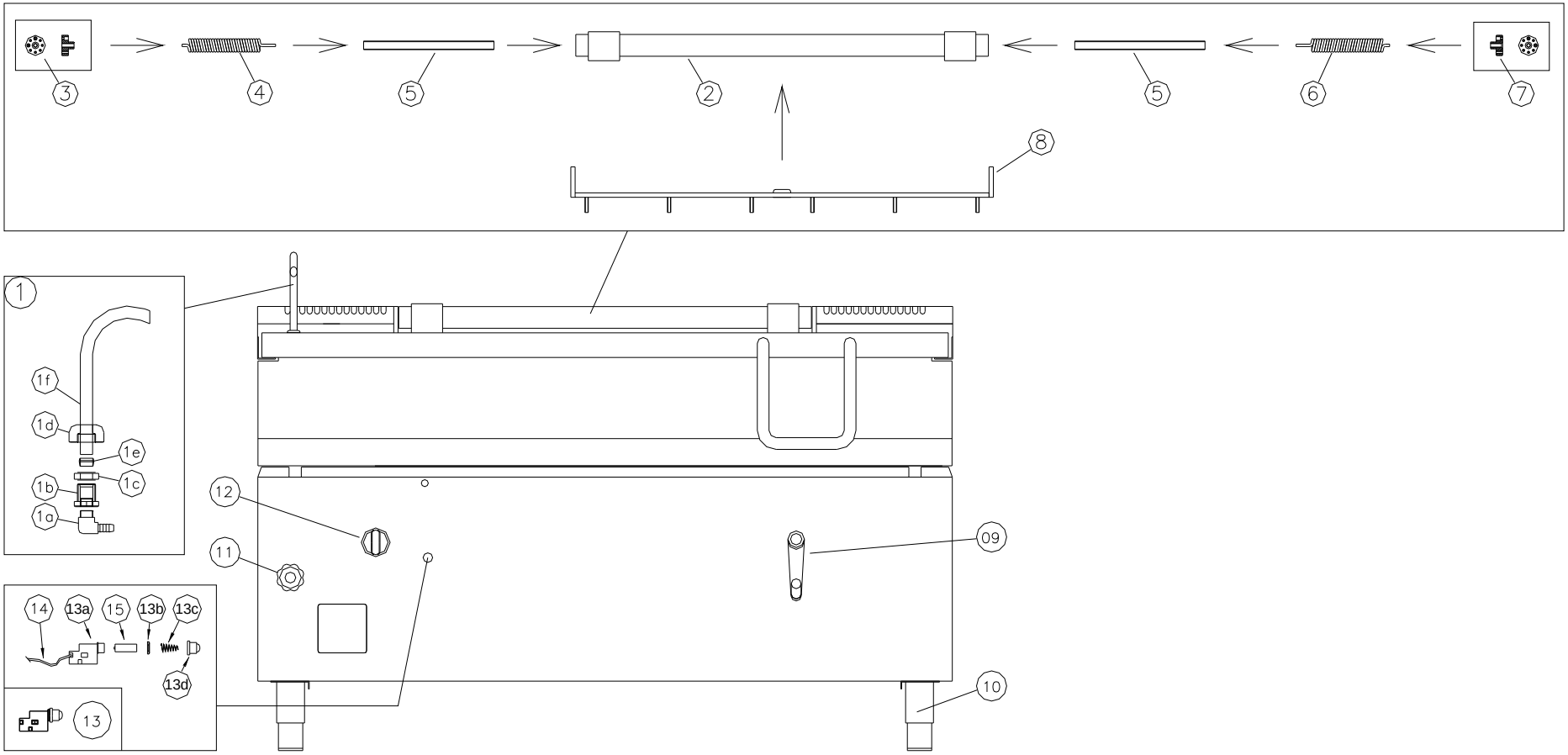

Pos.	Mod.		Cod.	DESCRIZIONE I	DESCRIPTION GB	BESCHREIBUNG D	DESCRIPTION F
1	BM1...		GRP04-0110	*ASS. CANNA CARICO H2O VERTICALE*	*Water inlet pipe*	*Wasserzulaufrohr*	*Tube d'eau*
1a	BM1...		10400154	PORTAGOMMA M 3/8"X10 A GOMITO CROM.			
1b	BM1...		SMB0075-00	MANICOTTO CARICO H2O			
1c	BM1...		SMB0078-00	DADO OTTONE M24X1,5			
1d	BM1...		SMB0076-00	GHIERA FILET.X CANNA CARICO H2O			
1e	BM1...		10400083	BICONO USCITA D.16			
1f	BM1...		SMB0574-00	CANNA D.16 VERT.H2O			
02	BM1.160I-200I		SMB1360-00	Cerniera inox	Hinge inox	Scharnier inox	Charnière inox
03	BM1.160I-200I		SMB1362-00	TESTA SX CERNIERA CROMATA	HINGE HEAD LF CHROM.PLATED	DECKEL LIINKS SCHARNIER	TÊTE GAUC. CHARNERE CHROMEE
04	BM1.160I-200I		SMB0615-00	Molla x cerniera	Hinge Spring	Scharnierenfeder	Ressort pour charnière
05	BM1.160I-200I		SMB0614-00	TUBO PERNO X MOLLA CERNIERA	PIN PIPE SPRING HINGE	HOHLSTIFT FUER FEDER SCHARNIER	TUBE PIVOT X RESSORT CHARNIERE
06	BM1.160I-200I		SMB0617-00	Molla x cerniera	Hinge Spring	Scharnierenfeder	Ressort pour charnière
07	BM1.160I-200I		SMB0610-00	TESTA DX CERNIERA CROMATA	HINGE HEAD RGHT CHROM.PLATED	DECKEL RE. SCHARNIER	TÊTE DROITE CHARNERE CHROMEE
08	BM1.160I-200I		SMB1356-00	Supporto cerniera	Hinge support	Scharnierhalter	Support charnière
09	BM1...		SB0120-00	Volantino completo	Handwheel	Handrad	Volant
10	BM1...		20100020	Ass. piedino da 2" H=165	Foot 2" H=165	Fuss 2" H=165	Pied 2" H=165
11	BM1...		30200008	Rubinetto carico acqua	Water inlet tap	Wasserzulaufhahn	Robinet d'alimentation
12	BM1G...			Manopola termostato	Knob for Thermostat	Knebel für Thermostat	Manette pour thermostat
13	BM1G...		40100132	*Pulsante accensione a pila*	*Starting button*	*Elektr. Zundung Shalter*	*Touche allumage*
13a	BM1G...			Corpo accensione a pila	Body ignition to battery	Gehäuse Zündung Batterie	Corps allumage à pile
13b	BM1G...			Dado fissaggio	Dice implantation	Mutter Befestigung	Dé fixation
13c	BM1G...			Molla accensione a pila	Motivating force ignition to battery	Feder Zündung Batterie	Ressort allumage à pile
13d	BM1G...			Cappuccio accensione a pila	Pointed hood ignition to battery	Schutzkappe Zündung Batterie	Capuchon allumage à pile
14	BM1G...		40100133	Cavo accensione a pila	Cable ignition to battery	Kabel Zündung Batterie	Cable allumage à pile
15	BM1G...		40200107	Pila accensione 1,5 v	Pile 1,5V x ignition	Batterie 1,5V x Zundsystem	Pile 1,5V x allumage

Mod. BM1G160I / BM1G200I

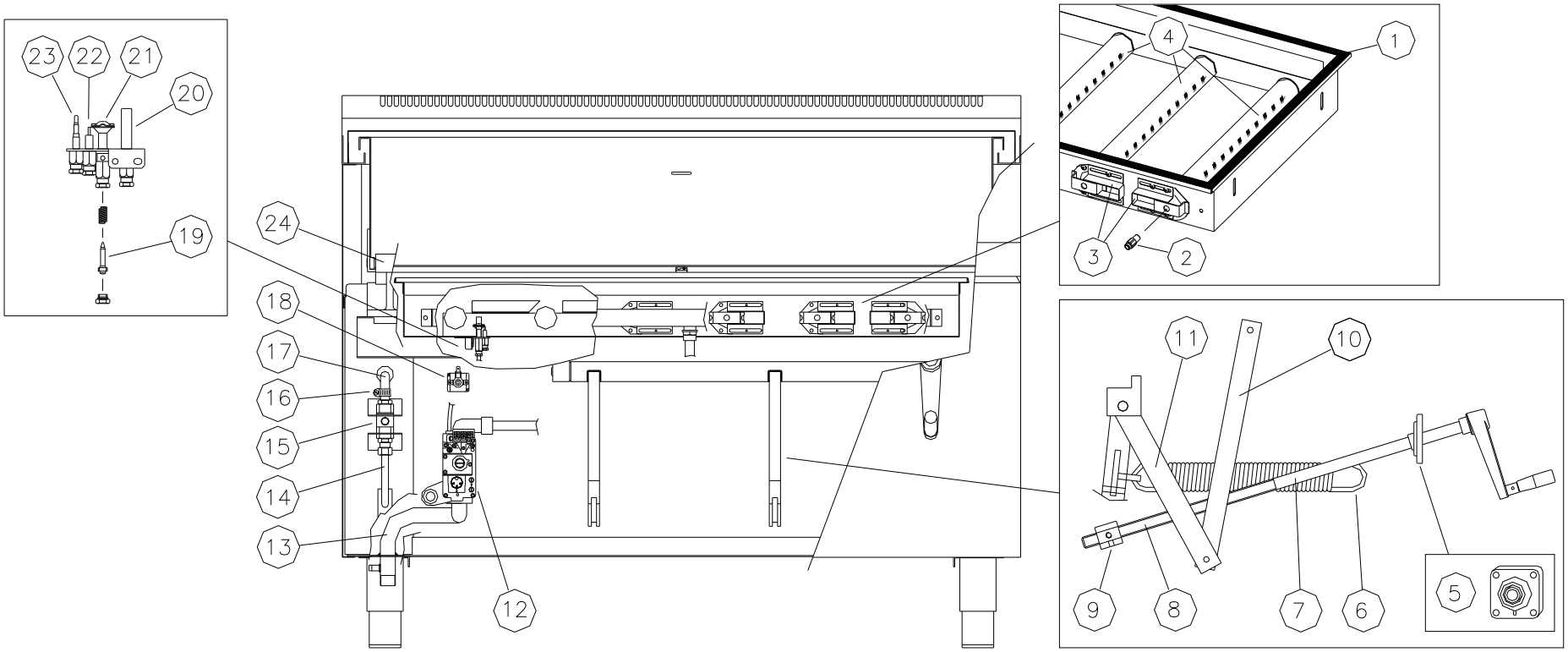

Pos.	Mod.		Cod.	Descrizione I	Description GB	Beschreibung D	Description F
01	BM1G...	C	60500100	Treccia Vetros D.13mm	Insulation Cord	Insulation Cord	Tresse Vetros D.13mm
				Ugello	Injector	Düse	Gicleur
02	BM1G160I BM1G200I		30500038 30500064 30500080 30500042 30500072	G20 20 mbar Ø185 G25 25 mbar Ø195 G25 20 mbar Ø210 G30 29 mbar Ø115 G30 50 mbar Ø105	G20 20 mbar Ø185 G25 25 mbar Ø195 G25 20 mbar Ø210 G30 29 mbar Ø115 G30 50 mbar Ø105	G20 20 mbar Ø185 G25 25 mbar Ø195 G25 20 mbar Ø210 G30 29 mbar Ø115 G30 50 mbar Ø105	G20 20 mbar Ø185 G25 25 mbar Ø195 G25 20 mbar Ø210 G30 29 mbar Ø115 G30 50 mbar Ø105
03	BM1G...		SC1404-00	Squadretta regolazione aria	Air regulator	Luftregler	Régulateur d'air
04	BM1G...	C	30400050	Bruciatore	Burner	Brenner	Brûleur
05	BM1....		20400012	Supporto ghisa con cuscinetto	Bearing	Kugellager	Coussinet
06	BM1....		20500030	Molla sollevamento vasca	Spring for tilting of pan	Kompensationsfeder Tiegel	Ressort soulèvement cuve
07	BM1....		SMB1042-00	Prolunga per vite	Extension for Screw	Verlängerung für Schraube	Prolonge pour vis
08	BM1....		SMB0129-00	Vite x gruppo sollevamento vasca	Screw for tilting of pan	Schraubenmutter	Vis basculement cuve
09	BM1....	C	SC0022-00	Madrevite	Female screw	Schraubenmutter	Vis mère
10	BM1....		SMB0624-00	Leva sup. sollevam. vasca	Lever for Tilting of pan	Hubhebel kippbratpfanne	Levier soulèvement cuve
11	BM1....		SMB1038-00	Ass. gruppo sollevam. vasca	Tilting of pan	Hubwerk kippbratpfanne	Groupe soulèvement cuve
12	BM1G...		30100014	Elettrovalvola gas	Gas solenoid valve	Gasmagnetventil	Electro-soupape eau
13	BM1G...		SMB1060-00	Ass. rampa entrata gas	Ramp gas inlet	Rampe gas eingang	Rampe entrée gaz
14	BM1....		SMB0066-00	Conduttura carico H^2O	Water inlet pipe	Wasserzulaufrohr	Raccord entrée eau
15	BM1....		30200008	Rubinetto carico acqua	Water inlet tap	Wasserzulaufhahn	Robinet d'alimentation
16	BM1....		10300033	Fascetta AISI 304 c/vite OTTONE	S.steel clip Typ n19	Schlauchbinder Typ n19 CHROM-NICKEL	Ceinture serre-tube AISI 304 avec vis en cuivre
17	BM1....		10600022	Tubo (silicone) carico H^2O	Water inlet pipe	Wasserzulaufrohr	Tube entré d'eau
18	BM1....		40100042	Termostato di lavoro	Thermostat	Thermostat	Thermostat
19	BM1G...		30500007 30500006	Ø 51 x G20 Ø 30 x G30	Ø 51 x G20 Ø 30 x G30	Ø 51 x G20 Ø 30 x G30	Ø 51 x G20 Ø 30 x G30
20	BM1G...		40400130	Termopila	Thermopile	Thermosaule	Thermopile
21	BM1G...		30100000	Pilota	Pilot	Zündflammenbrenner	Pilote
22	BM1G...		30100052	Candela	Ignitor	Kerze	Bougie
23	BM1G...		40400110	Termocoppia	Thermocouple	Thermoelement	Thermocouple
24	BM1....		SMB0634-00	Ass. staffa ribaltamento	Flask tilting of pan	Bügel für hubwerk kippbratpfanne	Étrier soulèvement cuve

Mod. (BM1G160I / BM1G200I) + BAS0030

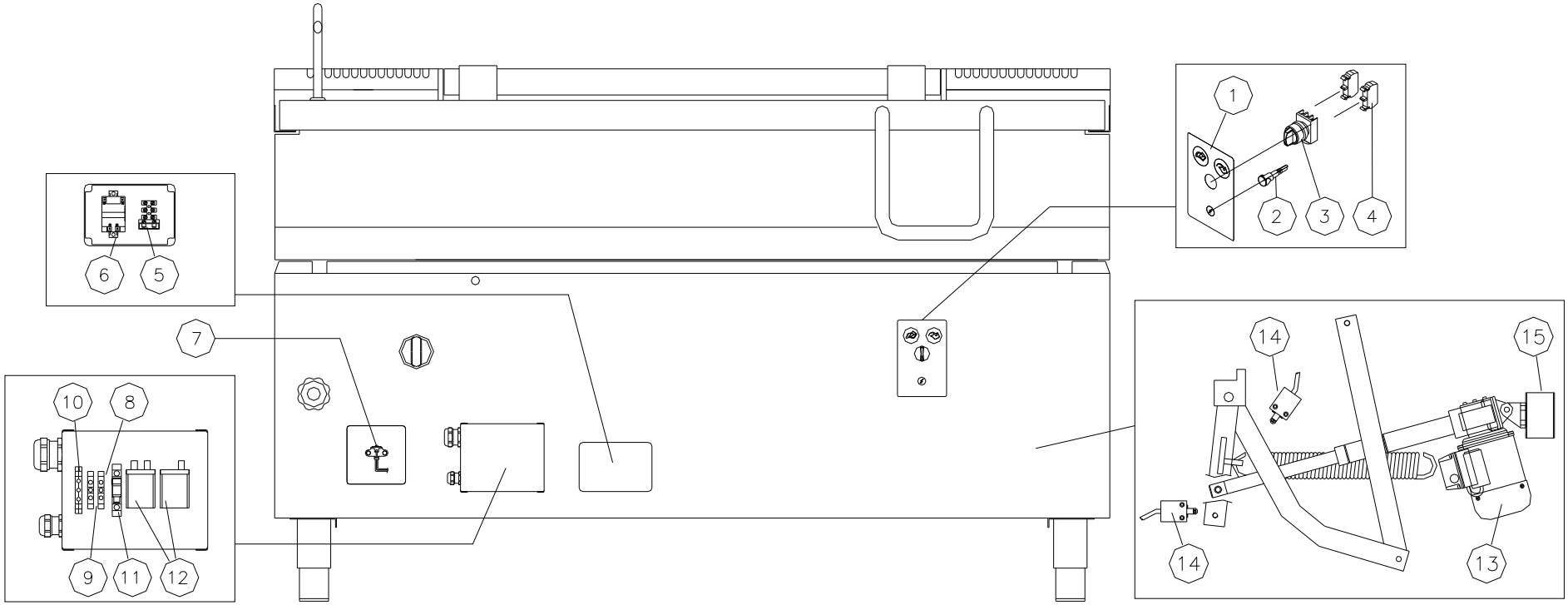

Pos.	Mod.		Cod.	DESCRIZIONE I	DESCRIPTION GB	BESCHREIBUNG D	DESCRIPTION F
01	BM1....		40700294	Mascherina sollev. motoriz.			
02	BM1G...		40200152	Lamp. Cristallo verde	Green signal	Kontrolleuchte grünenfarbig	Voyant de couleur vert
03	BM1....		40100026	Selettore 3 posizioni c/rit al centro	Selector 3 positions with return	Wahler 3 position mit zuruck	Sélecteur 3 positions avec retour
04	BM1....		40100112	Blocchetto contatti 1NA	Contact block (normal open contact)	Kontaktblock	Bloc contacts
05	BM1....		40200084	Fusibile	Fuse	Schmelzsicherung	Fusible
06	BM1....		40200112	Trasformatore x accensione	Transformer x ignition	Transformator x Zundsystem	Transformateur x allumage
07	BM1....		40100019	Microinterruttore			
08	BM1....		40200024	Morsetto unipolare	Unipolar Holdfast	Einpolig- Klammer	Unipolaire serre-câble
09	BM1....		40200022	Morsetto unipolare	Unipolar Holdfast	Einpolig- Klammer	Unipolaire serre-câble
10	BM1....		40200032	Morsetto unipolare	Unipolar Holdfast	Einpolig- Klammer	Unipolaire serre-câble
11	BM1....		40200084	Fusibile	Fuse	Schmelzsicherung	Fusible
12	BM1....	C	40100030	Relè 3 P	Relais 3 P	Dreipoligens Relais	Relais 3 P
13	BM1....		40300122	Attuatore lineare corsa	Actuator linear stroke	Aktuator linear fahrtrichtung	Actionneur ligne course
14	BM1....	C	40100028	Finecorsa a rotella	Limit switch	Endschalter	Fin de course à roulette
15	BM1....		SMB1048-00	Staffa fiss. attuatore			