21-00 ESP.PM.DE

ESPLOSO PENTOLA DIRETTA ELETTRICA

EXPLODED DRAWING DIRECT- ELECTRICAL PAN

EXPLOSION-ZEICHNUNG DIREKT-ELEKTRISCHE KOCHKESSEL

VUE ÉCLATÉE MARMITE ELECTRIQUE DIRECT

Mod. PM.DE100/150

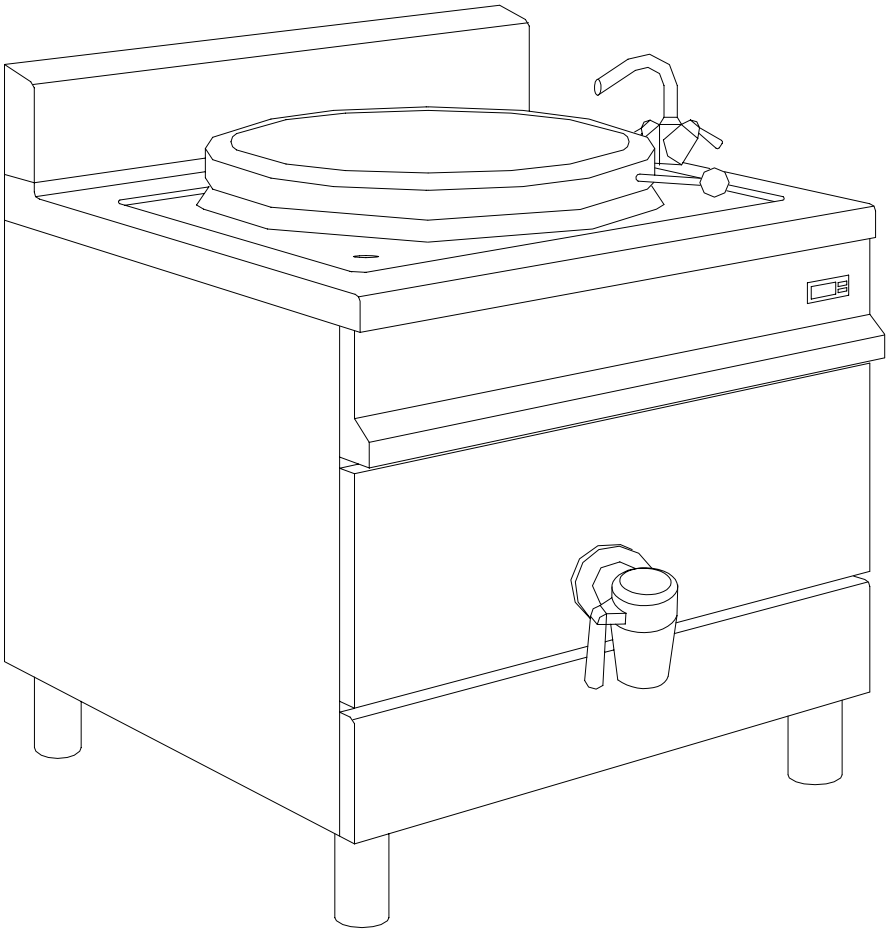

Storia delle revisioni

Punti modificati e natura delle correzioni

Nr. Revis.	Data di revis.	Punto	Natura della correzione	Type of correction	Verbesserungsart	Type de correction
00	1/07/2005	Tutti	Prima emissione	First issue	Erste Ausgabe	Première émission

PENTOLE 100/150LT ELETTRICHE DIRETTE

DIRECT-ELECTRICAL PANS 100/150LT

DIREKT- ELEKTRISCHE KOCHKESSEL 100/150LT

MARMITES 100/150LT ELECTRIQUE DIRECT

Mod. PM.DE100 / PM.DE150

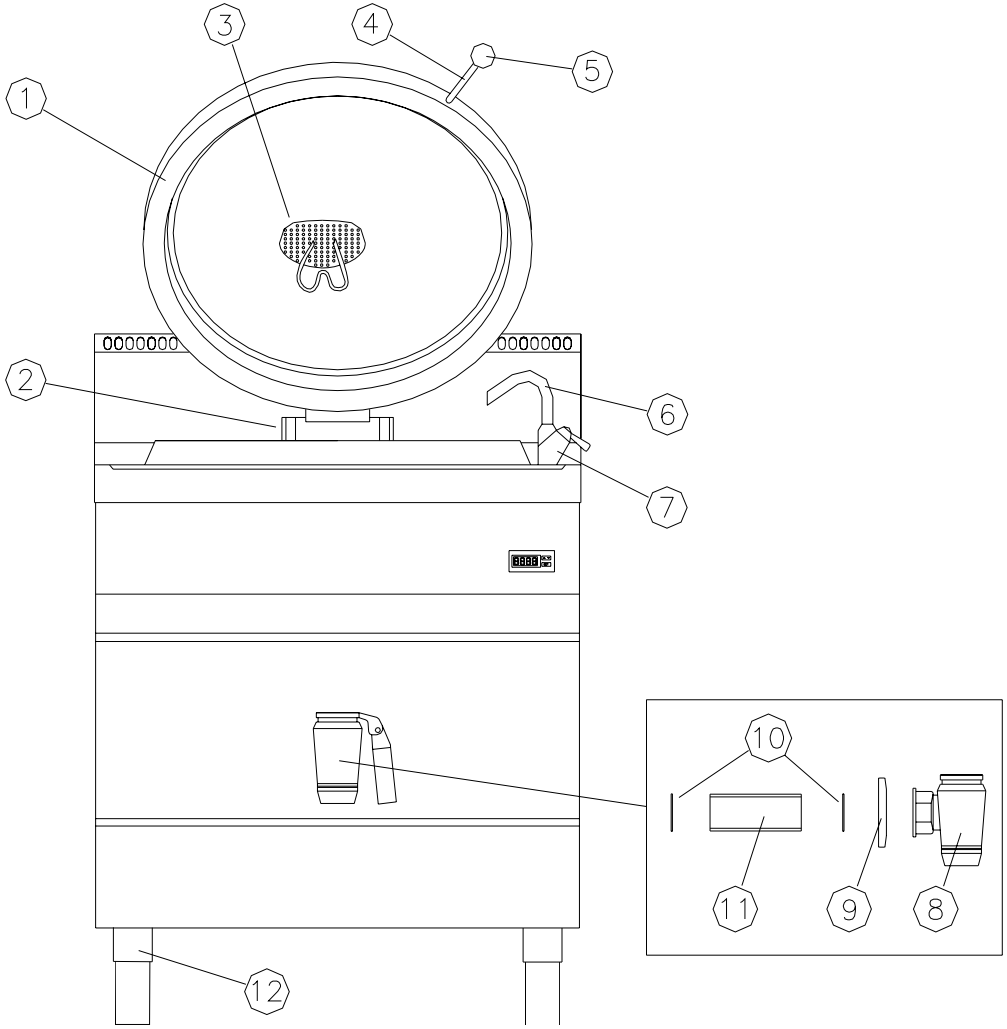

Mod. PM.DE100 / PM.DE150

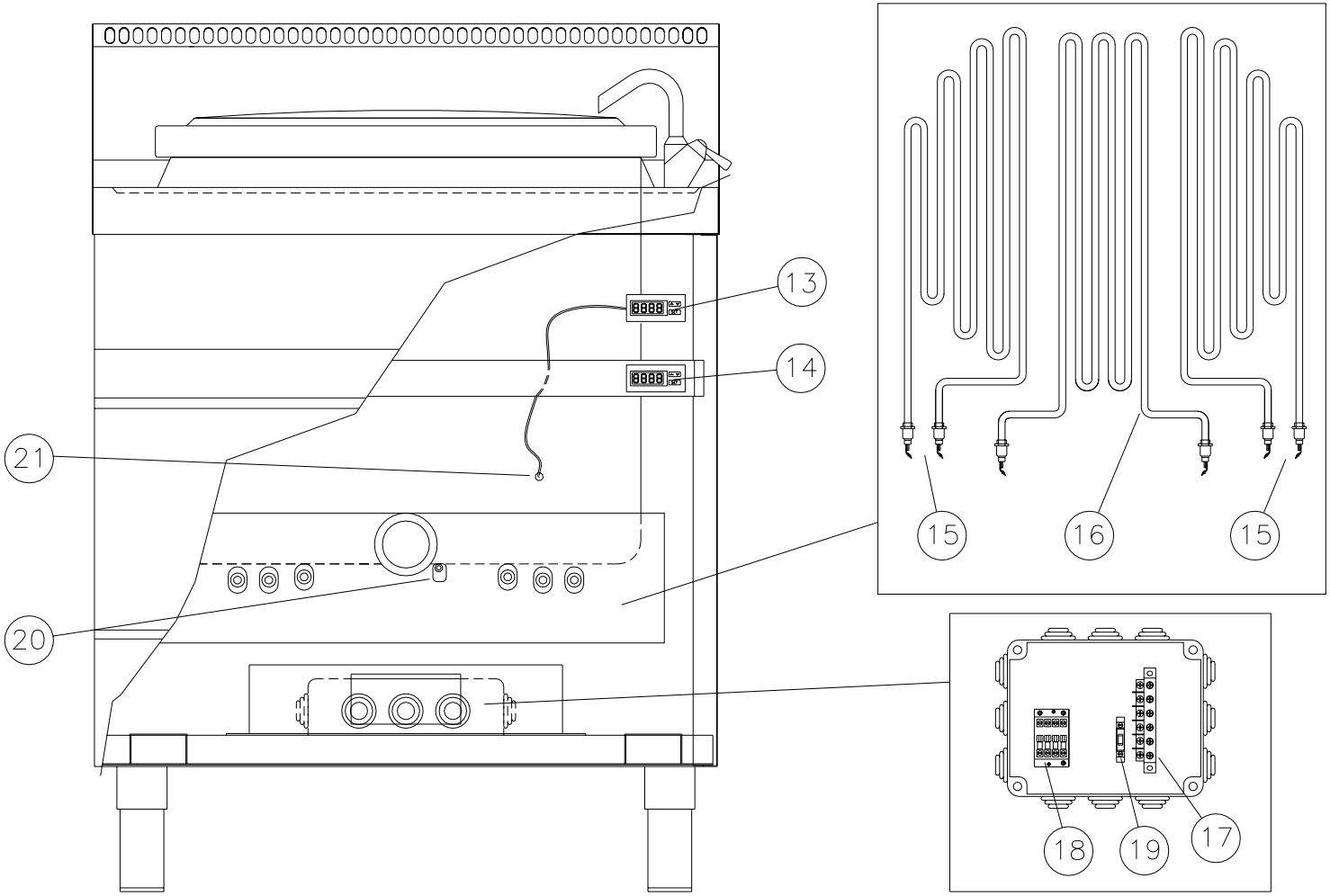

Mod. PM.DE100A / PM.DE150A

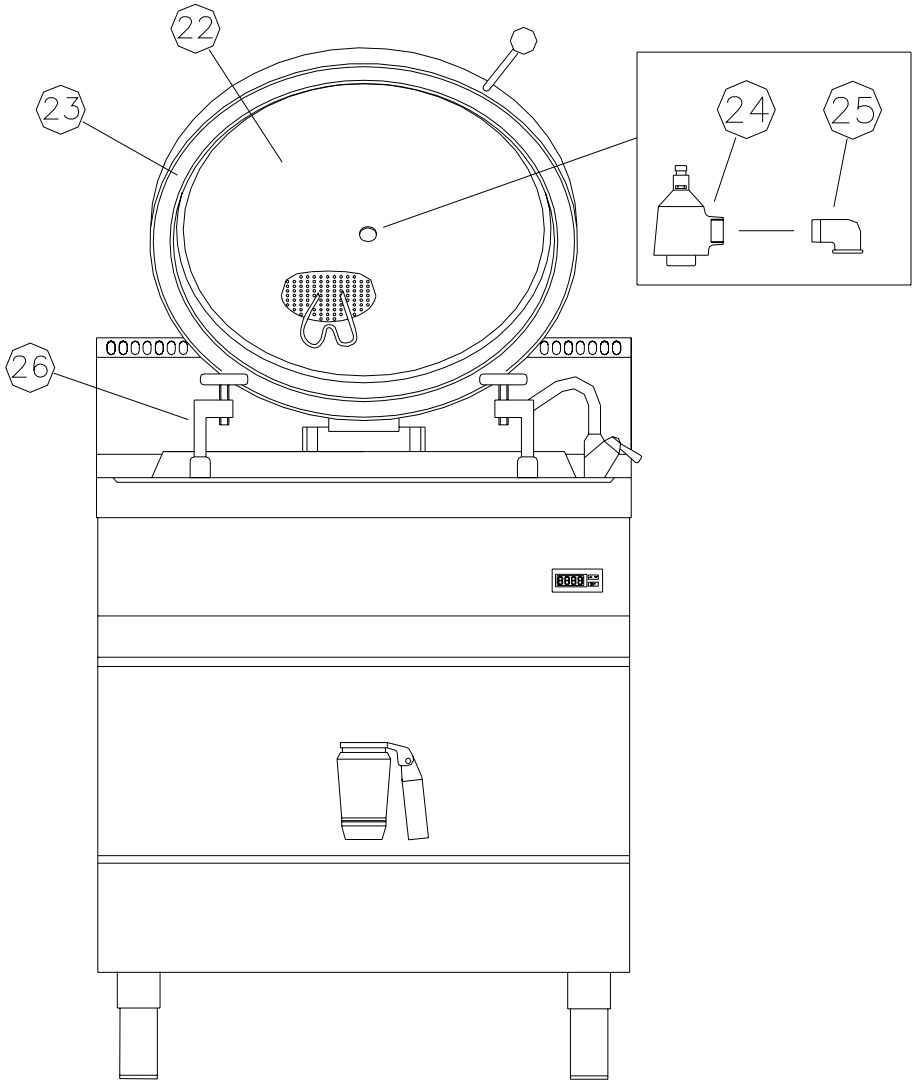

Pos.	Mod.		Cod.	Descrizione I	Description GB	Beschreibung D	Description F
01	PM.DE100/150		SMP0120-00	Coperchio normale	Lid	Deckel	Couvercle
02	PM.DE100/150		20300096	Cerniera Ø 320	Hinge Ø 320	Scharnier Ø 320	Charnière Ø 320
03	PM.DE100/150		30700122	Filtro per pentola	Kettle Filter	Filter kochkessel	Filtre marmite
04	PM.DE100/150		20200014	Prolunga per impugnatura	Handle extension	Verlängerung für Handgriff	Prolonge poignée
05	PM.DE100/150		20200013	Impugnatura coperchio	Cover handle	Deckelgriff	Poignée couvercle
06	PM.DE100/150		30200072	Canna rubinetto	Water cock	Leitung Wasserzufuhr	Tuyau robinet
07	PM.DE100/150		30200070	Rubinetto gruppo monoforo	Mixer tap 1 Hole connection	Hahngruppe – Einweg	Robinet groupe-monotrou
08	PM.DE100/150		30200198	Rubinetto di scarico 2”	Tap 2”	Armatur 2”	Robinet 2”
09	PM.DE100/150		10200002	Borchia per rub. Scarico 2”	Tap boss 2”	Stützring für Auslaßhahn 2”	Rondelle pour robinet 2”
10	PM.DE100/150		10500060	Guarniz.teflon Ø 60x46x2	Teflon Washer Ø 60x46x2	Dichtung Teflon Ø 60x46x2	Joint téflon Ø 60x46x2
11	PM.DE100/150		10400006	Nipples di scarico 2”	Nipples	Nipple	Ecrou
12	PM.DE100/150		20100020	Ass. piedino da 2”	Foot 2”	Fuss 2”	Pied 2”
13	PM.DE100/150		40700080	Termostato digitale di lavoro	Digital thermostat	Digital thermostat	Thermostat digital de travail
14	PM.DE100/150		40700080/1	Termostato digitale sicurezza	Digital safety thermostat	Digital Sichereitsthermostat	Thermostat digital de sécurité
15	PM.DE100/150	C	40400098	Resistenza laterale pentola 230V 4400W	Pan lateral heating element 230V 4400W	Kochkessel seitenheizkorper 230V 4400W	Résistance latéral pour marmite 230V 4400W
16	PM.DE100/150		40400096	Resistenza centrale pentola 230V 4300W	Pan central heating element 230V 4300W	Kochkessel Zentralheizkorper 230V 4300W	Résistance centrale pour marmite 230V 4300W
17	PM.DE100/150		40200016	Morsettiera	Hold Fast	Klemmkasten	Serre-câble
18	PM.DE100/150	C	40100023	Teleruttore 4P A9/25A	Electromagnetic switch	Fernschalter	Télérupteur
19	PM.DE100/150		40200084	Fusibile	Fuse	Schmelzsicherung	Fusible
20	PM.DE100/150		40800026	Sonda temperatura (termocoppia K 40600096)	Temperature feeler (Thermocouple K)	Temperaturfühler (Thermoelement K)	Sonde de température (Thermocouple K)
21	PM.DE100/150		40800024	Sonda temperatura (termocoppia K 40600096)	Temperature feeler (Thermocouple K)	Temperaturfühler (Thermoelement K)	Sonde de température (Thermocouple K)
22	PM.DE100A PM.DE150A		SMP0126-00	Coperchio autoclave	Autoclave lid	Autoklavdeckel	Couvercle autoclave
23			10600300/1	Guarnizione coperchio Autoclave	Autoclave lid gasket for kettles	Dichtung autoclavdeckel kochkessel	Joint couvercle autoclave marmite
24			30300026	Valvola coperchio autoclave	Safety valve	Sicherheitsventil	Soupape de sécurité
25			10400126	Curva M/F ¾” ottone	Brass bend M/F 3/4"	Kurve M/F 3/4" aus messing	Courbe M/F 3/4" cuivre
26			20300093	Gruppo tirante autoclave	Lid lock clamps	Verschlussklemme für Deckel	Fixation pour couvercle